EDITION / VERSİYON 01/2017

UPDATE / GÜNCELLEME 08/2024

# WINDOW AND DOOR
## PENCERE VE KAPI

# SYSTEM 40C
## SİSTEM 40C

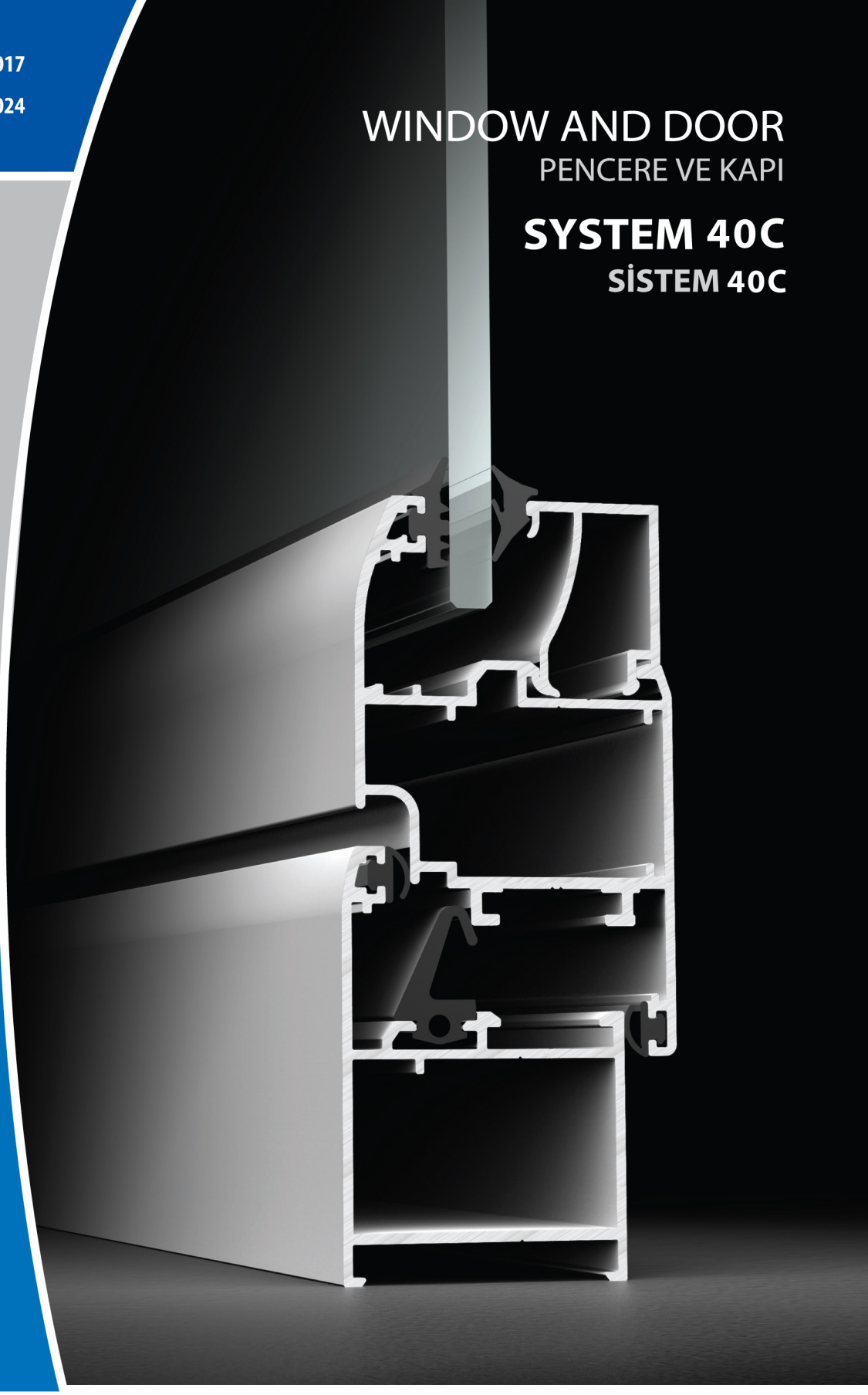

KURTOĞLU® ALUMINIUM

BRL® Aluminium System

LorenzoLine® aluminium profile system



# HARMONY **OF** SAFETY
# AESTHETICS

## **INDEX** / İÇİNDEKİLER


| | |
|---|---|
| **Company Information** / Hakkımızda | |
| **Technical Information**/ Teknik Bilgiler | **1-7** |
| **Profiles** / Profiller | |
| Aluminium | **9-28** |
| Perimetric | **29-34** |
| **Details** / Detaylar | |
| Aluminium | **35-67** |
| Perimetric | **69-80** |
| **Glazing Tables** / Cam Tabloları | **81-83** |
| **Accessories** / Aksesuarlar | **85-91** |
| **Cutting Size** / Kesim Ölçüleri | **93-98** |
| **Assembly Details** / Montaj Detayları | **99-106** |
| **Notes** / Notlar | |




www.kurtogluas.com

'KURTOĞLU ALÜMİNYUM SİSTEMLERİ,
MİMARİ PROJELERİNİZE ESTETİK ÇÖZÜMLER SUNAR.'



BRL Aluminium System

LorenzoLine aluminium profile system

Lorenzo bond Aluminium Composite Panel

aluteams Aluminium Profile Systems




# COMPANY INFORMATION

## FİRMAMIZ HAKKINDA

Our company started its operations with copper and lead casting in the 1960s, and in 1980, we started to serve in the Aluminium Sector with aluminium extrusion press that has 1200 ton capacity. KURTOGLU Aluminium is located in Corlu, approximately 100 km away from Istanbul and operates in 31.000 m2 indoor area. With our latest investments, our company has become a modern integrated facility.

- Annual production capacity ~ 34.000 tons,
- Approximately ~ 500 qualified employees,
- ISO 9001:2015 Quality System.
- Qualicoat Seaside Certificate,
- Qualanod Certificate,
- CE Certificate

The main production features of our Company are described as follows:

- Molding Room (Wire Erosion, Treatment Center),
- Aluminium Extrusion Presses, (800 tons, 1460 tons, 1880 tons, 1460/1880 tons, 2100 tons and 2600 tons),
- Anodic Oxidation Facility ( 75.000 amps - 412.500 m2 / month )
- Electrostatic Powder Paint Facility ( 750.000 m2 / month )
- Mechanical Processing Section ( CNC Treatment Center)

Kurtoğlu Aluminyum exports its products to; U.S. America, New York, Los Angeles, San Francisco, Switzerland, Germany, Austria, Belgium, Sweden, Albania, England, Greece, Bulgaria, Cyprus, Serbia, Montenegro, Hungary, Georgia, Croatia, Turkmenistan, Kyrgyzstan, Azerbaijan, Moldova, Ukraine, Macedonia, Kosovo, Romania, Belarus, Czech Republic, Libya, Iraq, Algeria, Tunisia, Qatar, Nigeria, Israel, Ghana, Gabon, France, India, Saudi Arabia, Burkina Faso, Ethiopia, Egypt, Ivory Coast, Morocco, Poland, The Netherlands, Russia, Madagascar, Niger, Tanzania, Mozambique, Norway, Lebanon, Mayotte, Palestine, Senegal, Somali, Benin, Canada, Panama.

KURTOĞLU ALUMINIUM continues to operate based on the principle of providing services to its customers with zero fault.

---

Şirketimiz 1960' lı yıllarda Bakır ve Kurşun ile üretim hayatına başlamıştır. 1980 yılında 1200 tonluk Alüminyum Ekstrüzyon presi ile üretim sektörüne girmiştir.
KURTOĞLU Alüminyum; İstanbul'a yaklaşık 100 km mesafede Çorlu'da bulunmaktadır. 31.000 $m^2$ kapalı alanda faaliyetini sürdürmektedir. Son yapılan yatırımlarla şirketimiz modern bir entegre tesis haline ulaşmıştır.

- Yıllık kapasite ~ 34.000 ton,
- Yaklaşık ~ 500 kalifiye eleman,
- ISO 9001:2015 kalite sistemi,
- Qualicoat Seaside Belgesi,
- Qualanod Belgesi,
- CE Belgesi,

Şirketimizin ana özellikleri aşağıda da belirtilmiştir:

- Kalıphane Bölümü (Tel erozyon, İşleme Merkezi)
- Alüminyum Ekstrüzyon Presleri; ( 800 ton, 1460 ton, 1880 ton, 1460/1880 ton, 2100 ton ve 2600 ton ),
- Eloksal Tesisi ( 75.000 Amper - 412.500 $m^2$ / Ay )
- Elektrostatik Toz Boya Tesisi ( 750.000 $m^2$ / Ay )
- Mekanik İşlem Bölümü ( CNC İşleme Merkezi )

KURTOĞLU Alüminyum Ürünleri; Amerika, New York, Los Angeles, San Francisco, İsviçre, Almanya, Avusturya, Belçika, İsveç, Arnavutluk, İngiltere , Yunanistan, Bulgaristan, Kıbrıs, Sırbistan, Karadağ, Macaristan, Gürcistan, Hırvatistan, Türkmenistan, Kırgızistan, Azerbaycan, Moldovya, Ukrayna, Makedonya, Kosova, Romanya, Beyaz Rusya, Çek Cumhuriyeti, Libya, Irak, Cezayir, Tunus, Katar, Nijerya, İsrail, Gana, Gabon, Fransa, Hindistan, Suudi Arabistan, Burkina Faso, Etiyopya, Mısır, Fil Dişi Sahili, Fas, Polonya, Hollanda, Rusya Federasyonu, Madagaskar, Nijer, Tanzanya, Mozambik, Norveç, Lübnan, Mayotte, Filistin, Senegal, Somali, Benin, Kanada, Panama' ya ihraç edilmektedir.

KURTOĞLU ALÜMİNYUM müşterilerine sıfır hata ile hizmet vermeyi temel alarak çalışmalarını sürdürmektedir.

# ‘The countries of export;
# İhracat yapılan ülkeler’

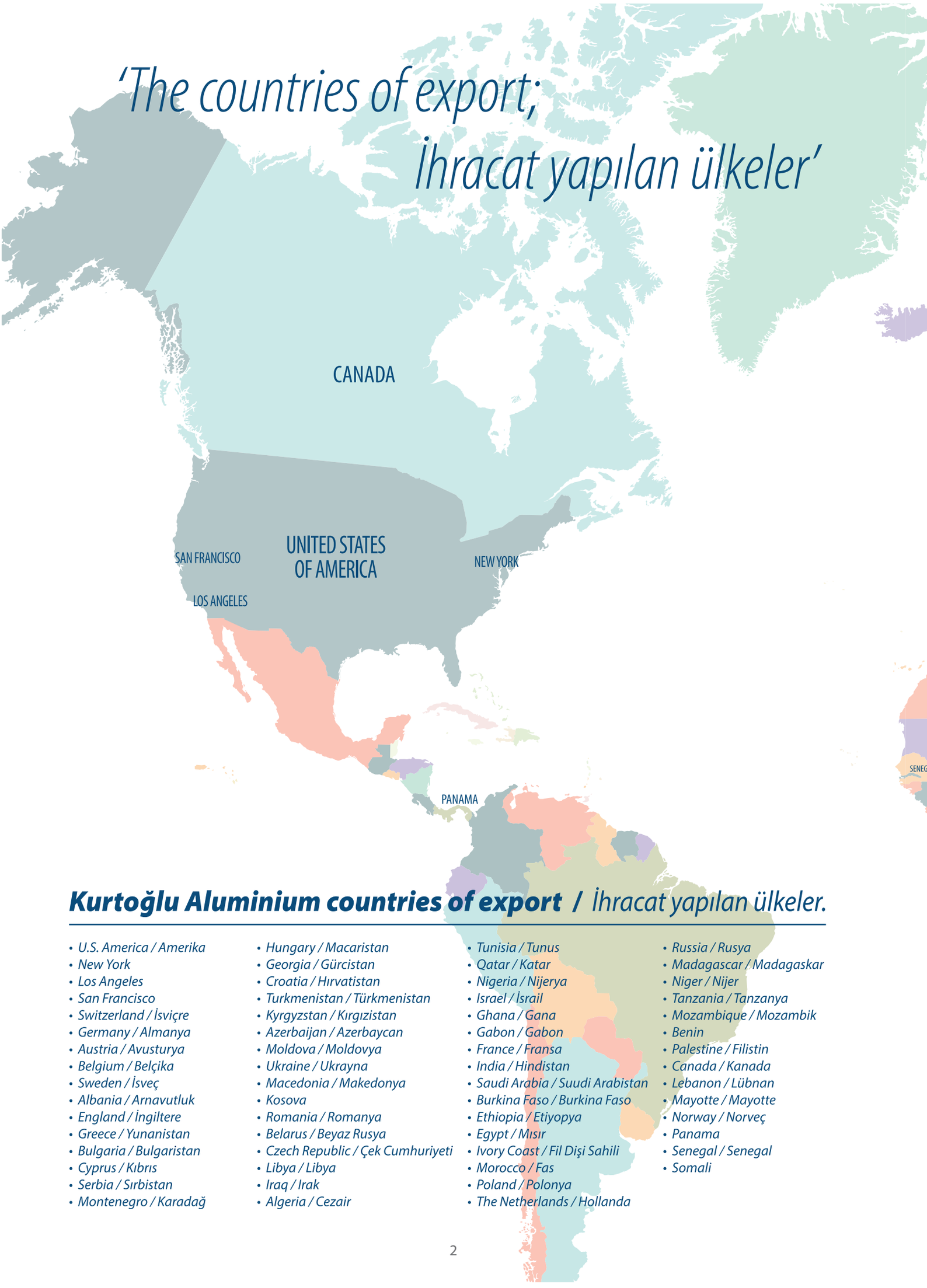


## ***Kurtoğlu Aluminium countries of export*** / *İhracat yapılan ülkeler.*

- *U.S. America / Amerika*
- *New York*
- *Los Angeles*
- *San Francisco*
- *Switzerland / İsviçre*
- *Germany / Almanya*
- *Austria / Avusturya*
- *Belgium / Belçika*
- *Sweden / İsveç*
- *Albania / Arnavutluk*
- *England / İngiltere*
- *Greece / Yunanistan*
- *Bulgaria / Bulgaristan*
- *Cyprus / Kıbrıs*
- *Serbia / Sırbistan*
- *Montenegro / Karadağ*
- *Hungary / Macaristan*
- *Georgia / Gürcistan*
- *Croatia / Hırvatistan*
- *Turkmenistan / Türkmenistan*
- *Kyrgyzstan / Kırgızistan*
- *Azerbaijan / Azerbaycan*
- *Moldova / Moldovya*
- *Ukraine / Ukrayna*
- *Macedonia / Makedonya*
- *Kosova*
- *Romania / Romanya*
- *Belarus / Beyaz Rusya*
- *Czech Republic / Çek Cumhuriyeti*
- *Libya / Libya*
- *Iraq / Irak*
- *Algeria / Cezair*
- *Tunisia / Tunus*
- *Qatar / Katar*
- *Nigeria / Nijerya*
- *Israel / İsrail*
- *Ghana / Gana*
- *Gabon / Gabon*
- *France / Fransa*
- *India / Hindistan*
- *Saudi Arabia / Suudi Arabistan*
- *Burkina Faso / Burkina Faso*
- *Ethiopia / Etiyopya*
- *Egypt / Mısır*
- *Ivory Coast / Fil Dişi Sahili*
- *Morocco / Fas*
- *Poland / Polonya*
- *The Netherlands / Hollanda*
- *Russia / Rusya*
- *Madagascar / Madagaskar*
- *Niger / Nijer*
- *Tanzania / Tanzanya*
- *Mozambique / Mozambik*
- *Benin*
- *Palestine / Filistin*
- *Canada / Kanada*
- *Lebanon / Lübnan*
- *Mayotte / Mayotte*
- *Norway / Norveç*
- *Panama*
- *Senegal / Senegal*
- *Somali*




BRL Aluminium System

LorenzoLine aluminium profile system

Lorenzo bond Aluminium Composite Panel

aluteams Aluminium Profile & Accessory Systems




# QUALITY POLICY

## KALİTE POLİTİKASI

The company's quality policy is based upon the pillars of product quality, state of the art technology, customer satisfaction,training, environmental awareness, and continuous development. Kurtoğlu always implements this policy in all of its operations and units.

Şirketin kalite politikası ürün kalitesine,yeni teknolojilere,müşteri memnuniyetine,eğitime,çevre duyarlılığına ve sürekli gelişime dayanır. Kurtoğlu,her zaman tüm faaliyet ve birimlerinde bu politikayı uygular.

## ORGADATA SOFTWARE & SOLUTION PARTNER

The conversational software Ksoft® matches perfectly with the requirements of all aluminum windows, door and curtain wall systems configuration, functionality and menu navigation. Ksoft® is a complete service package for architectural profile applications, and features all you need in the metal-processing operations with tremendous speed and perfection.

www.orgadata.com
ORGADATA
A CLICK AHEAD

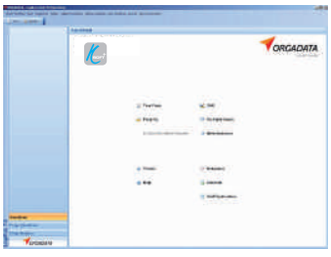


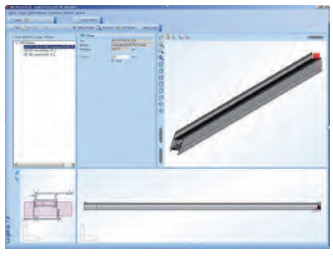
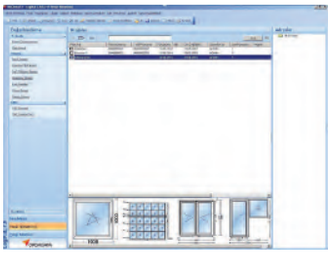
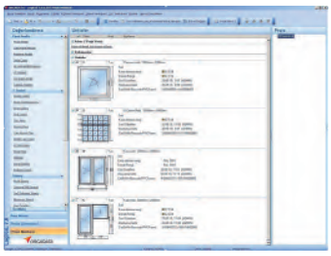
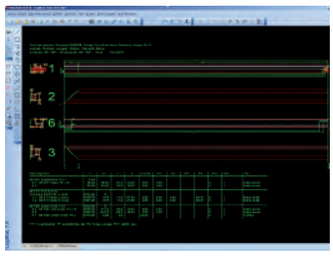

## ORGADATA YAZILIM VE ÇÖZÜM ORTAĞI

İletişimli Ksoft® yazılımı tüm alüminyum pencereler , kapı ve cephe sistemleri konfügrasyon, fonksiyonel ve menü navigasyonu ile ilgili ihtiyaçları karşılar. Ksoft® yazılım programı mimari profil uygulaması ve metal işinde gerekli özellikleri optimum hız ve olağanüstü sunan tam bir program paketidir.

# Evidence of Performance

**Air permeability, Watertightness, Resistance to wind load**

Test Report
No. **11-003575-PR01**
(PB-A01-02-en-01)

| | |
|---|---|
| **Client** | KURTOGLU ALUMINYUM<br>BAKIR KURSUN SAN. A.S.<br>Haciseremet Mevkii TEM Corlu Cikisi Velimese<br>59860 Tekirdag<br>Turkey |
| **Product** | Tilt and turn window with fixed sublight |
| **Designation** | System designation: 40 C |
| **Performance-relevant product details** | Material: Aluminium profiles |
| **Overall dimensions (WxH)** | 792 mm x 2,000 mm |
| **Special features** | |

**Results**

Air permeability according to EN 12207:1999-11

Class 4

Watertightness according to EN 12208:1999-11

Class E1200

Resistance to wind load
according to EN 12210:1999-11/AC:2002-08

Class C3 / B3

**ift** Rosenheim
20.01.2012

**Jörn Peter Lass, Dipl.-Ing. (FH)**
**Head of Testing Department**
**Building Components**

**Robert Kolacny, Dipl.-Ing. (FH)**
**Operating Product Officer**
**Building Components**

**Basis**

EN 14351-1:2006+A1:2010

Test standard/s:
EN 1026:2000-06
EN 1027:2000-06
EN 12211:2000-06

Correspond/s to the national standard/s (e.g. DIN EN)

**Representation**



**Instructions for use**

The results obtained can be used by the manufacturer as the basis for the manufacturer ITT test report summary. Observe the specifications set out by the applicable product standard.

**Validity**

The data and results refer solely to the tested and described specimen. Classification remains valid as long as the product and the above basis remain unchanged. The results can be extrapolated under the manufacturer's own liability subject to observance of the relevant specifications set out by the applicable product standard. This test/evaluation does not allow any statement to be made on any further characteristics regarding performance and quality of the construction presented, in particular the effects of weathering and ageing were not taken into account.

**Notes on publication**

The ift-Guidance Sheet "Advertising with ift test documents" applies. The cover sheet can be used as an abstract.

The report contains a total of 20 pages.

ift Rosenheim GmbH
Geschäftsführer:
Dipl.-Ing. (FH) Ulrich Sieberath
Dr. Jochen Peichl

Theodor-Gietl-Str. 7 - 9
D-83026 Rosenheim
Tel.: +49 (0)8031/261-0
Fax: +49 (0)8031/261-290
www.ift-rosenheim.de

Sitz: 83026 Rosenheim
AG Traunstein, HRB 14763
Sparkasse Rosenheim
Kto. 3822
BLZ 711 500 00

Notified Body Nr.: 0757
Anerkannte PÜZ-Stelle: BAY 18
DAP-PL-0808.99
DAP-ZE-2288.00
TGA-ZM-16-93-00
TGA-ZM-16-93-60

Technical**information**

Technical**information**

## SYSTEM 40C

### GENERAL GROPERTIES

1- Glazing: from 4 to 22 mm
2- E.P.D.M. Sealing Gasket
3- Efficent drainage of the vent section
4- Efficent chamber for pressure leveling which provides a better watertightness.
5- Central sealing gasket for a better wind and watertightness.
6- Proved drainage avoids infiltration of water under the central gasket.
7- Direct front chamber drainage.
8- Economic height: frame: 40mm
vent: 45 mm
9- Alternatif conren cleats with pres and die cast corner joint
10- Acoustical gasket in E.P.D.M.
11- 6060 / 6063 aluminium alloy

### 40C ALUminium

1- EURO groove I

### 40C PERImetric

1- Perimetric Groove suitable for 9 axus and 20 mm hinge
2- 09-156-00 extruded joint is suitable for GU unijet - D and Siegenia Aubi A 300

**Euro Groove Section**

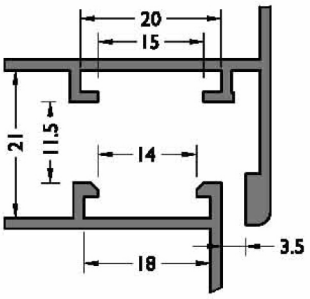


**Multilock Section**

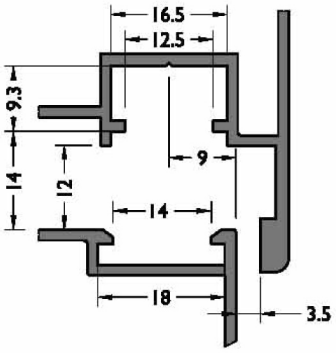


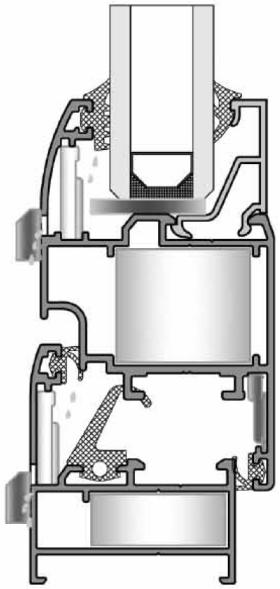

**40C ALUminium**

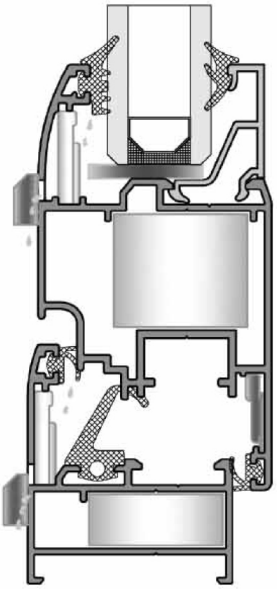

**40C PERImetric**

EXTERIOR VIEW

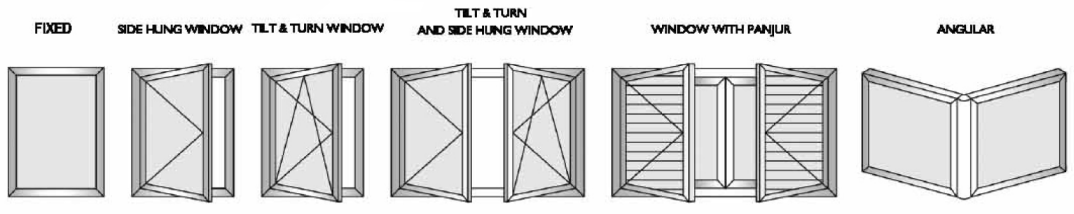


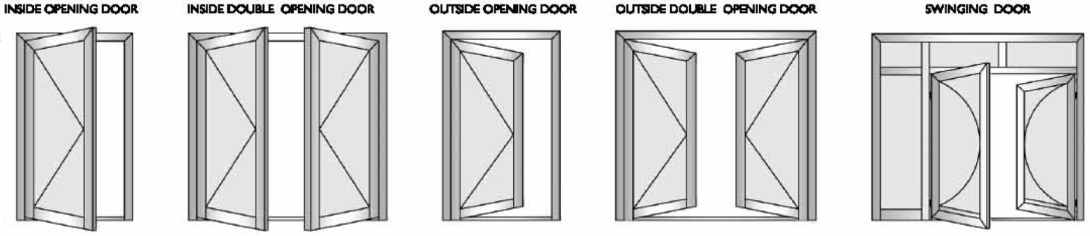

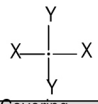


| Code | Drawing | Theoretical Weight kg/m | Statics | | Covering Surface (cm) | |
|---|---|---|---|---|---|---|
| | | | Jxx ( cm4 ) | Jyy ( cm4 ) | Inside | Outside |
| 40-101-00 |  | 0.594 | 4.59 | 2.99 | 2.93 | 5.57 |
| 40-102-00 | 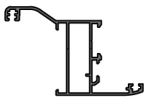 | 0.756 | 12.85 | 9.18 | 6.19 | 5.56 |
| 40-103-00 | 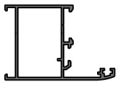 | 0.701 | 5.94 | 6.40 | 4.13 | 6.77 |
| 40-106-00 | 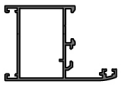 | 0.723 | 6.19 | 6.83 | 4.23 | 6.87 |
| 40-104-00 | 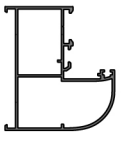 | 1.031 | 17.61 | 11.54 | 4.13 | 8.64 |
| 40-105-00 | 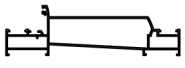 | 1.786 | 9.55 | 164.29 | - | - |
| 40-201-00 | 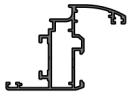 | 0.786 | 7.21 | 5.66 | 5.01 | 5.82 |
| 40-202-00 | 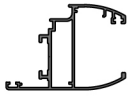 | 0.815 | 7.99 | 7.14 | 7.72 | 5.96 |
| 40-203-00 | 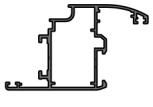 | 0.908 | 9.24 | 10.89 | 6.21 | 7.26 |

| Code | Drawing | Theoretical Weight kg/m | Statics | | Covering Surface (cm) | |
|---|---|---|---|---|---|---|
| | | | Jxx ( cm4 ) | Jyy ( cm4 ) | Inside | Outside |
| 40-204-00 | 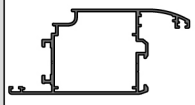 | 1.050 | 11.76 | 25.07 | 8.83 | 9.29 |
| 40-205-00 | 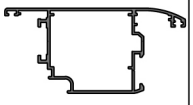 | 1.050 | 10.79 | 25.40 | 6.83 | 10.94 |
| 40-206-00 | 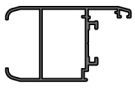 | 0.795 | 6.79 | 8.51 | 5.84 | 7.86 |
| 40-301-00 |  | 0.759 | 5.00 | 5.66 | 2.84 | 8.03 |
| 40-302-00 | 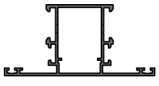 | 0.831 | 6.07 | 11.04 | 4.08 | 9.27 |
| 40-303-00 | 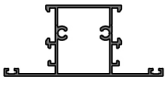 | 0.927 | 6.64 | 13.34 | 4.54 | 9.73 |
| 40-304-00 | 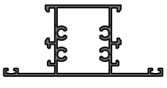 | 1.019 | 6.71 | 13.79 | 4.54 | 9.73 |

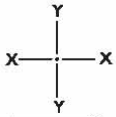


| Code | Drawing | Theoretical Weight kg/m | Statics | | Covering Surface (cm) | |
|---|---|---|---|---|---|---|
| | | | Jxx (cm4) | Jyy (cm4) | Inside | Outside |
| 40C-305-00 | 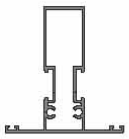 | 1.051 | 75.7 | 10.53 | 9.69 | 7.97 |
| 40C-401-00 |  | 1.318 | 61.97 | 11.60 | 12.92 | 10.32 |
| 40C-402-00 | 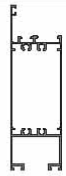 | 1.410 | 65.29 | 11.74 | 12.92 | 10.32 |
| 40C-403-00 | 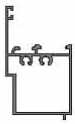 | 0.783 | 7.94 | 5.37 | 4.43 | 3.97 |
| 40C-404-00 |  | 0.491 | - | - | 3.81 | 5.2 |
| 40C-406-00 |  | 0.362 | - | - | 4.98 | |
| 40C-407-00 |  | 0.485 | - | - | 11.80 | |
| 20-101-00 |  | 0.355 | - | - | 7.13 | |
| 07-212-00 |  | 0.363 | - | - | 2.67 | 1.07 |

| Code | Drawing | Theoretical Weight kg/m | Statics | | Covering Surface (cm) | |
|---|---|---|---|---|---|---|
| | | | Jxx (cm4) | Jyy (cm4) | Inside | Outside |
| 07-211-00 |  | 0.184 | - | - | 3.04 | |
| 07-301-00 |  | 0.516 | - | - | 17.5 | |
| 40C-501-00 | 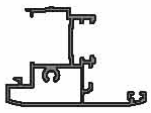 | 0.856 | 6.09 | 6.55 | 6.90 | |
| 40C-502-00 | 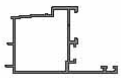 | 0.675 | 4.73 | 7.14 | 1.82 | 6.62 |
| 40C-503-00 |  | 0.386 | - | - | 1.50 | 3.17 |
| 40C-504-00 |  | 0.592 | - | - | 2.29 | 4.85 |
| 10-127-015 |  | 0.530 | 4.21 | 4.21 | 14.16 | |
| 10-134-015 |  | 0.875 | 18.93 | 18.93 | 22.17 | |
| 40C-507-00 |  | 0.475 | 4.10 | 4.10 | 6.78 | |

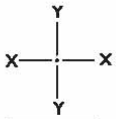


| Code | Drawing | Theoretical Weight kg/m | Statics | | Covering Surface (cm) | |
|---|---|---|---|---|---|---|
| | | | Jxx (cm4) | Jyy (cm4) | Inside | Outside |
| 40C-508-00 |  | 0.370 | 1.35 | 2.18 | 3.44 | |
| 40C-509-00 | 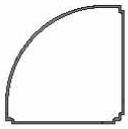 | 0.777 | 17.91 | 17.92 | 11.53 | |
| 40C-510-00 |  | 0.446 | - | - | 2.50 | 2.34 |
| 07-101-00 |  | 0.237 | - | - | 3.80 | |
| 07-102-00 |  | 0.325 | - | - | 6.86 | |
| 07-103-00 |  | 0.490 | - | - | 6.86 | |
| 07-201-00 |  | 0.119 | - | - | 1.67 | |
| 08-101-00 |  | 0.217 | - | - | 2.71 | |
| 08-102-00 |  | 0.223 | - | - | 3.02 | |

| Code | Drawing | Theoretical Weight kg/m | Statics | | Covering Surface (cm) | |
|---|---|---|---|---|---|---|
| | | | Jxx (cm4) | Jyy (cm4) | Inside | Outside |
| 08-107-00 |  | 0.261 | - | - | 4.02 | |
| 08-108-00 |  | 0.269 | - | - | 4.23 | |
| 08-109-00 |  | 0.279 | - | - | 4.52 | |
| 08-110-00 |  | 0.264 | - | - | 4.08 | |
| 08-111-00 |  | 0.217 | - | - | 3.98 | |
| 09-101-00 |  | 2.570 | - | - | - | - |
| 09-103-00 |  | 3.702 | - | - | - | - |
| 09-105-00 |  | 5.473 | - | - | - | - |

# perimetric profiles

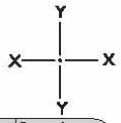


| Code | Drawing | Theoretical Weight kg/m | Statics | | Covering Surface (cm) | |
|---|---|---|---|---|---|---|
| | | | Jxx (cm4) | Jyy (cm4) | Inside | Outside |
| 40C-151-00 | 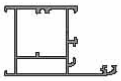 | 0.877 | 7.35 | 8.84 | 4.65 | 7.47 |
| 40C-103-00 | 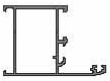 | 0.701 | 5.94 | 6.40 | 4.13 | 6.77 |
| 40C-106-00 | 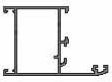 | 0.723 | 6.19 | 6.83 | 4.23 | 6.87 |
| 40C-104-00 | 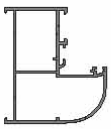 | 1.050 | 17.61 | 11.54 | 4.13 | 8.64 |
| 40C-251-00 | 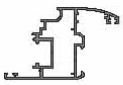 | 0.927 | 8.89 | 9.15 | 5.96 | 6.96 |
| 40C-252-00 | 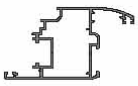 | 0.996 | 10.11 | 14.54 | 7.09 | 5.90 |
| 40C-253-00 | 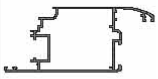 | 1.141 | 12.68 | 31.75 | 8.99 | 9.54 |
| 40C-254-00 | 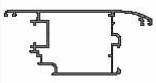 | 1.141 | 11.75 | 31.75 | 7.39 | 11.63 |
| 40C-351-00 | 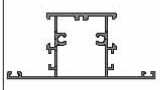 | 0.973 | 7.31 | 13.09 | 5.07 | 9.70 |

| Code | Drawing | Theoretical Weight kg/m | Statics | | Covering Surface (cm) | |
|---|---|---|---|---|---|---|
| | | | Jxx (cm4) | Jyy (cm4) | Inside | Outside |
| 40C-302-00 | 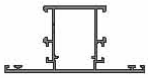 | 0.831 | 6.07 | 11.04 | 4.08 | 9.27 |
| 40C-551-00 | 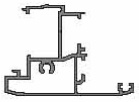 | 0.852 | 5.93 | 6.50 | 1.40 | 7.44 |
| 09-102-00 |  | 2.995 | - | - | - | - |
| 09-156-00 | 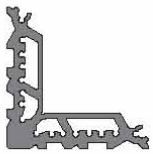 | 5.101 | - | - | - | - |

Aluminium**profiles**

Aluminium**profiles**

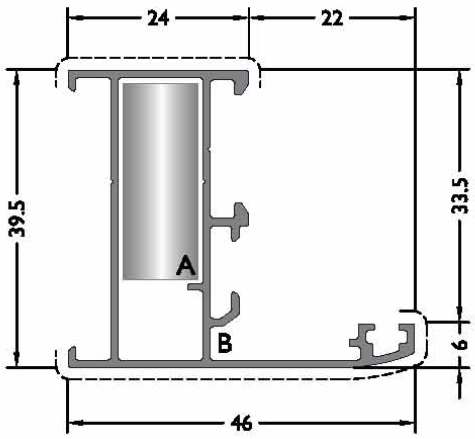


**CODE**

## 40C-101-00

**THEORETICAL WEIGHT kg/m**

**0.594**

**EXTRUDED CORNER JOINT**



**A** CC-101-26.5



**B** FUJI 2000

**DIE-CAST CORNER JOINT**



LC-1127

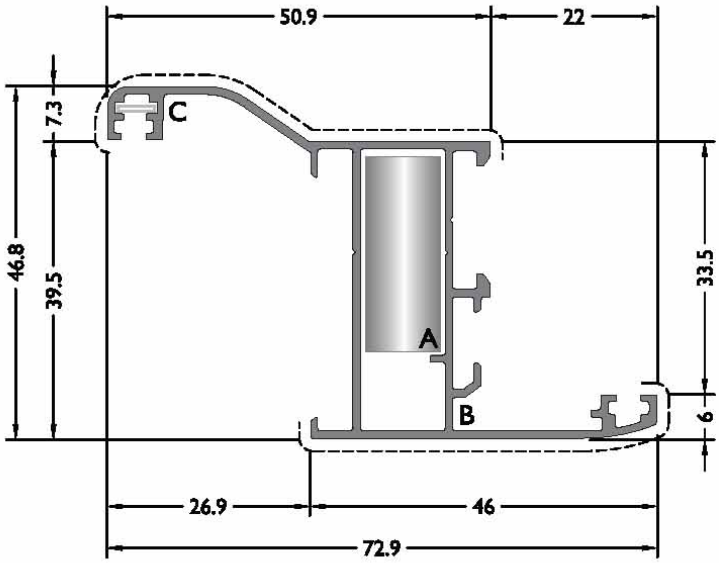


**CODE**

## 40C-102-00

**THEORETICAL WEIGHT kg/m**

**0.756**

**EXTRUDED CORNER JOINT**



**A** CC-101-26.5



**B** FUJI 2000



**C** MO 19

**DIE-CAST CORNER JOINT**



LC-1127

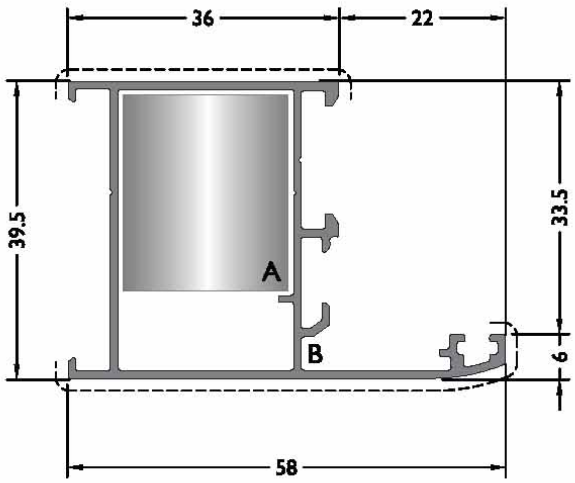


**CODE**

## 40C-103-00

**THEORETICAL WEIGHT kg/m**

**0.701**

**EXTRUDED CORNER JOINT**



**A** CC-103-26.5



**B** FUJI 2000

**DIE-CAST CORNER JOINT**



LC-2327

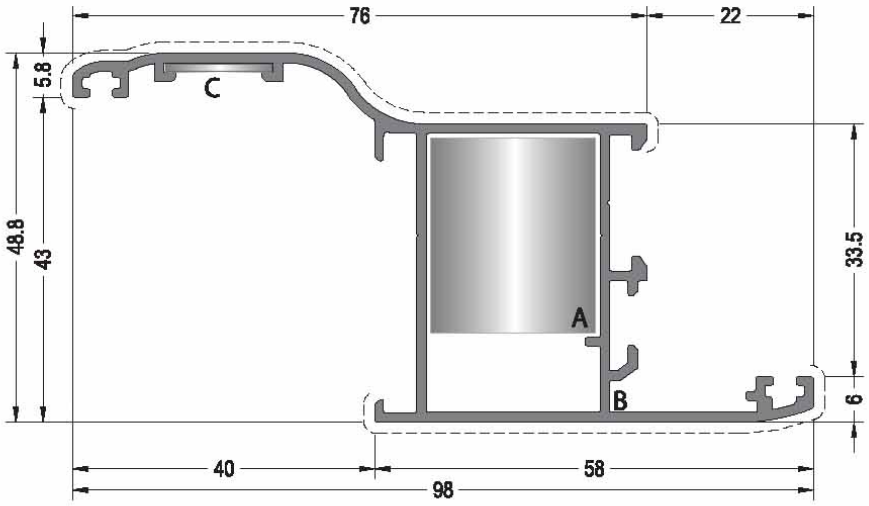


**CODE**

## 40C-123-00

**THEORETICAL WEIGHT kg/m**

**0.919**

**EXTRUDED CORNER JOINT**


**A** CC-103-26.5


***A** CC-156-26.5


**B** LC- 174


**C** MO 20.1

**DIE-CAST CORNER JOINT**


LC-2327

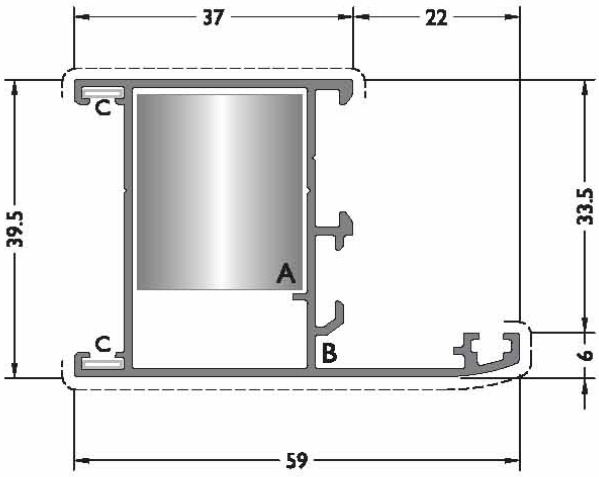


**CODE**

## 40C-106-00

**THEORETICAL WEIGHT kg/m**

**0.723**

**EXTRUDED CORNER JOINT**


**A** CC-103-26.5


**B** FUJI 2000


**C** MO 19

**DIE-CAST CORNER JOINT**


LC-2327

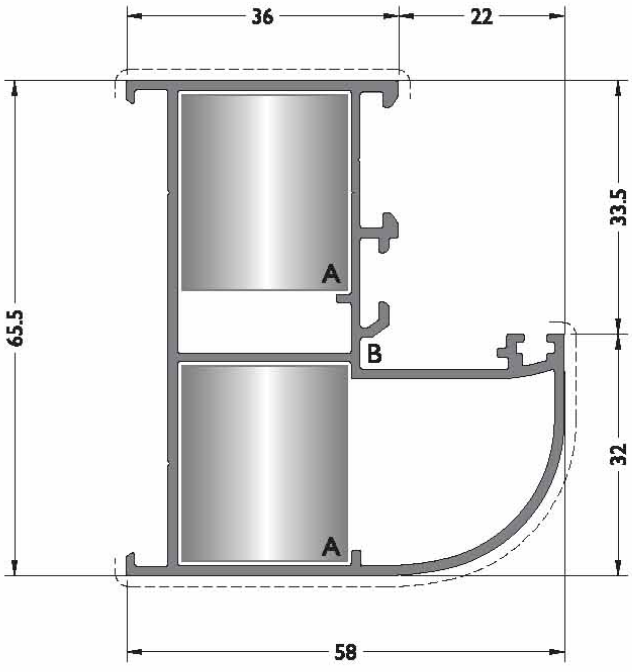


**CODE**

## 40C-104-00

**THEORETICAL WEIGHT kg/m**

**1.031**

**EXTRUDED CORNER JOINT**


**A** CC-103-26.5


**B** FUJI 2000

**DIE-CAST CORNER JOINT**


LC-2327

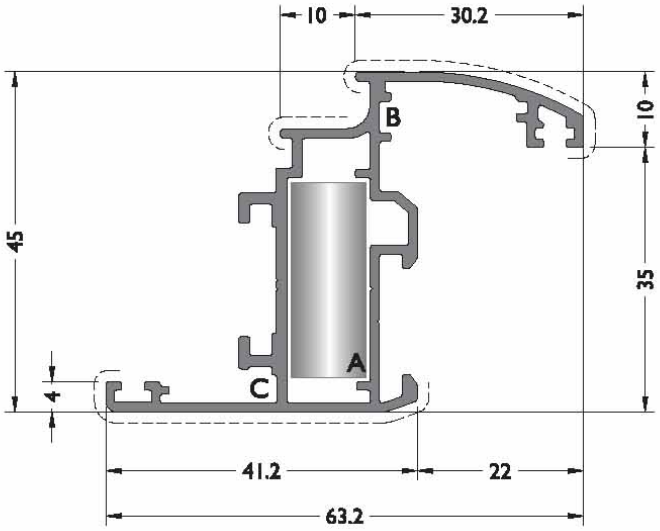


**CODE**

## 40C-201-00

**THEORETICAL WEIGHT kg/m**

**0.786**

**EXTRUDED CORNER JOINT**


**A** CC-101-26.5


**B** FUJI 2000


**C** MO 20

**DIE-CAST CORNER JOINT**


LC-1127

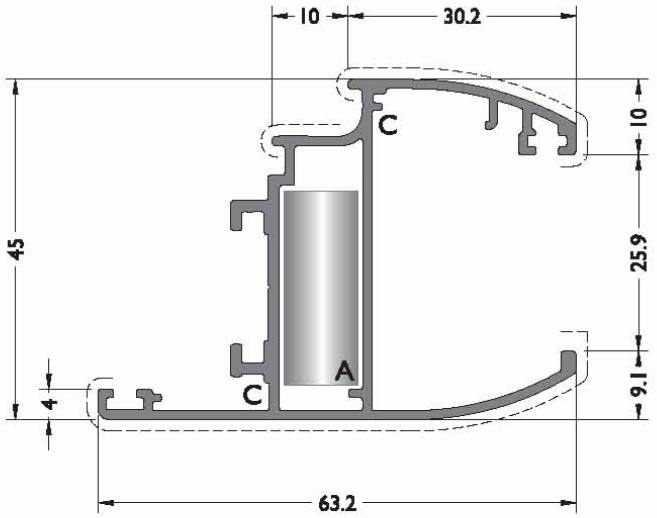


**CODE**

## 40C-202-00

**THEORETICAL WEIGHT kg/m**

**0.815**

**EXTRUDED CORNER JOINT**


**A** CC-101-26.5


**C** MO 20

**DIE-CAST CORNER JOINT**


LC-1127

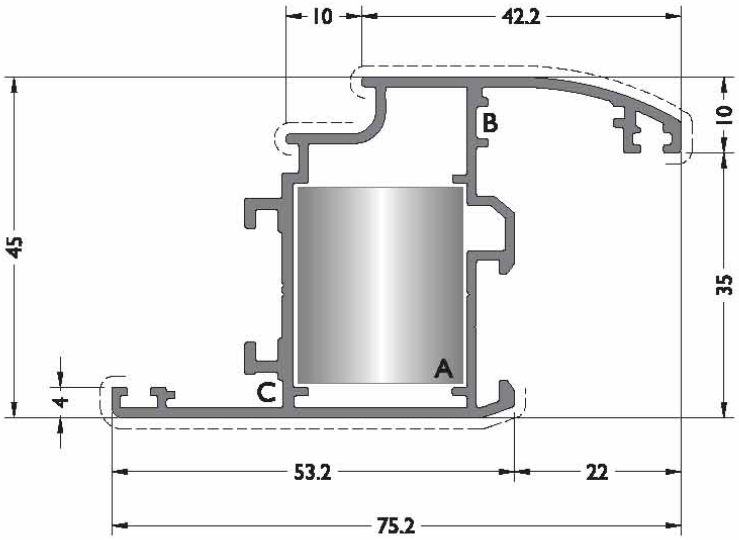


**CODE**

## 40C-203-00

**THEORETICAL WEIGHT kg/m**

**0.908**

**EXTRUDED CORNER JOINT**


**A** CC-103-26.5


**B** FUJI 2000


**C** MO 20

**DIE-CAST CORNER JOINT**


LC-2327

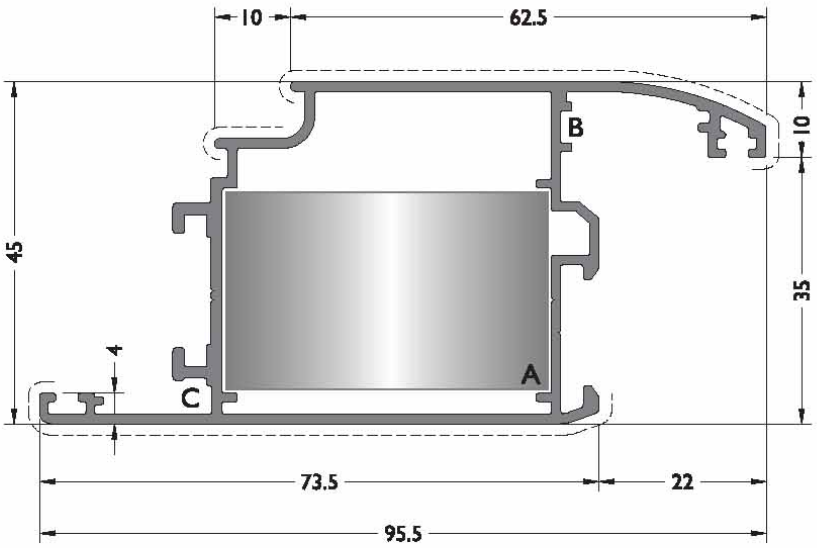


**CODE**

**40C-204-00**

**THEORETICAL WEIGHT kg/m**

**0.998**

**EXTRUDED CORNER JOINT**



**A** CC-105-26.5



**B** FUJI 2000



**C** MO 20

**DIE-CAST CORNER JOINT**



LC-4327

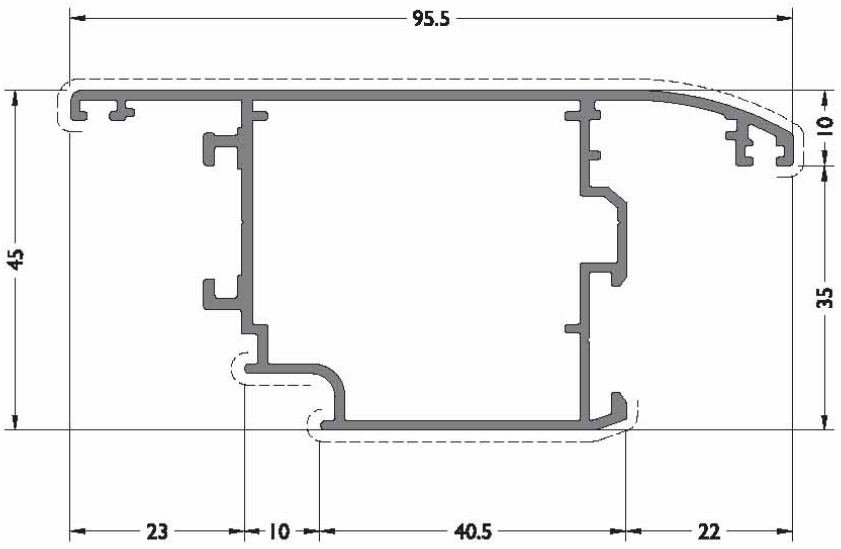


**CODE**

**40C-205-00**

**THEORETICAL WEIGHT kg/m**

**0.997**

**EXTRUDED CORNER JOINT**



**A** CC-105-26.5



**B** FUJI 2000



**C** MO 20

**DIE-CAST CORNER JOINT**



LC-4327

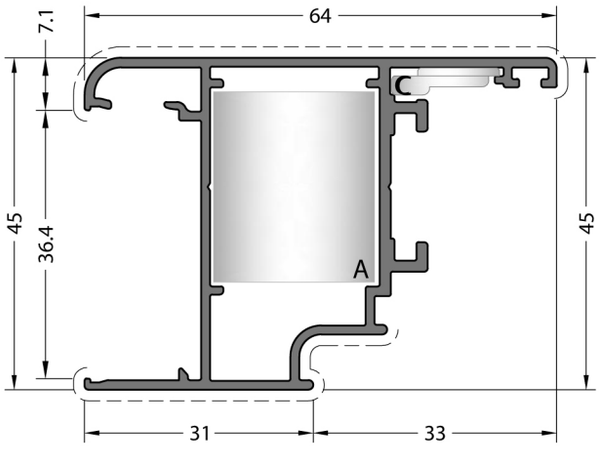


**CODE /** KOD

**40C-207-00**

**THEORETICAL WEIGHT kg/m**

TEORİK AĞIRLIK kg/m

**0.814**

**EXTRUDED CORNER JOINTS**

KÖŞE TAKOZU



A CC-103-26.5



C PK-20

**DIE-CAST CORNER JOINT**

PİMLİ BAĞLANTI



A LC-2327

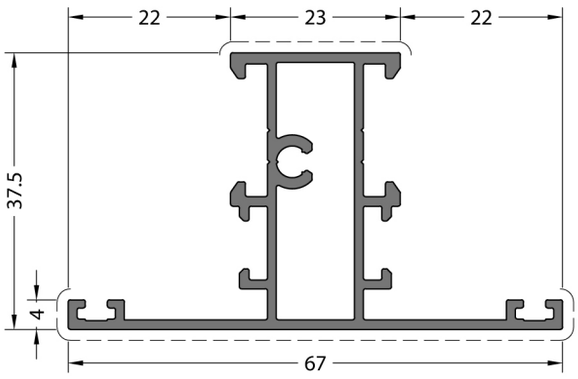


**CODE** / KOD

**40C-301-00**

**THEORETICAL WEIGHT kg/m**
TEORİK AĞIRLIK kg/m
**0.756**

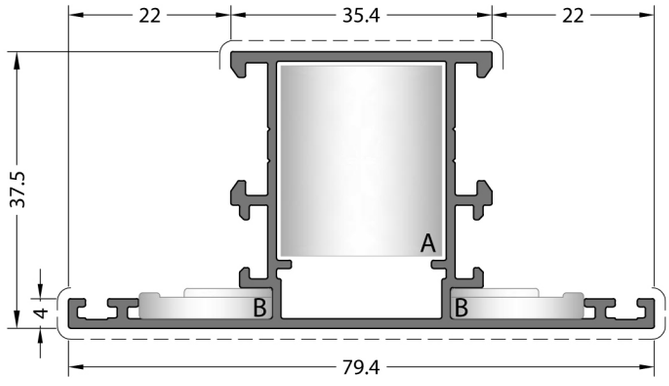


**CODE** / KOD

**40C-302-00**

**THEORETICAL WEIGHT kg/m**
TEORİK AĞIRLIK kg/m
**0.828**

**EXTRUDED CORNER JOINTS**
KÖŞE TAKOZU


A CC-103-26.5


B LC-174

**DIE-CAST CORNER JOINT**
PİMLİ BAĞLANTI


A LC-2327

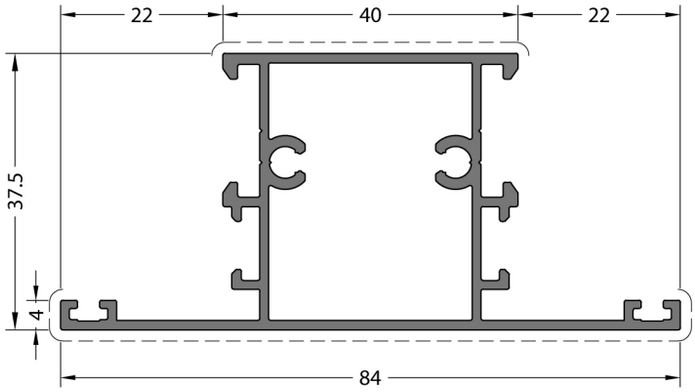


**CODE** / KOD

**40C-303-00**

**THEORETICAL WEIGHT kg/m**
TEORİK AĞIRLIK kg/m
**0.923**

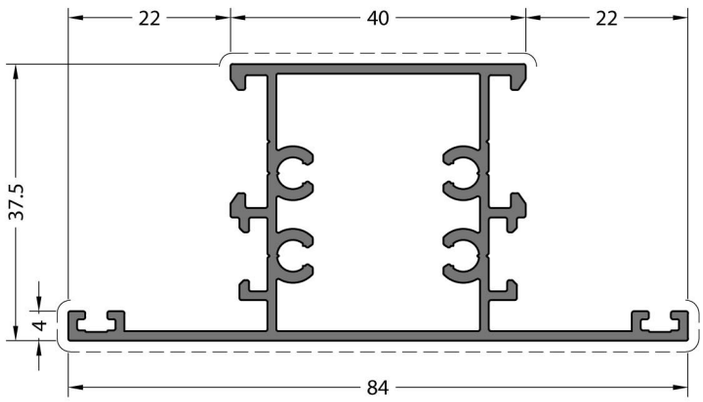


**CODE** / KOD

**40C-304-00**

**THEORETICAL WEIGHT kg/m**

TEORİK AĞIRLIK kg/m

**1.015**

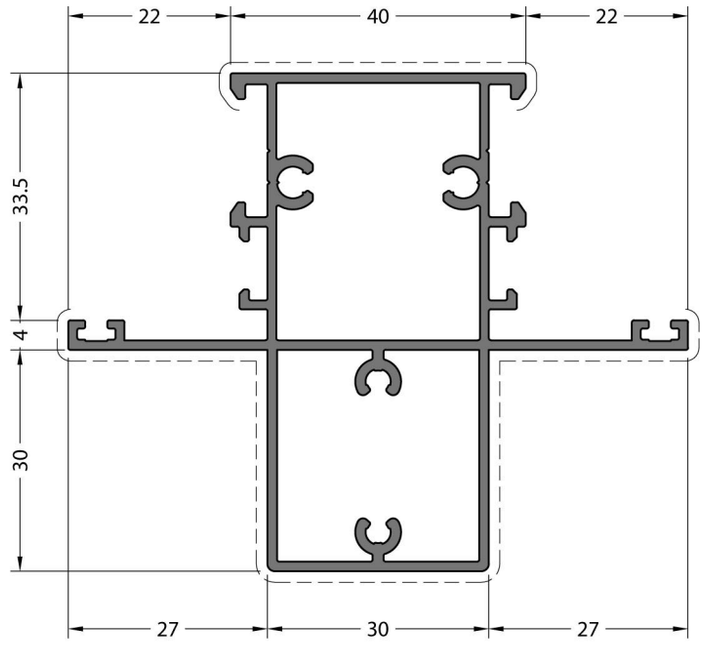


**CODE** / KOD

**40C-323-00**

**THEORETICAL WEIGHT kg/m**

TEORİK AĞIRLIK kg/m

**1.326**

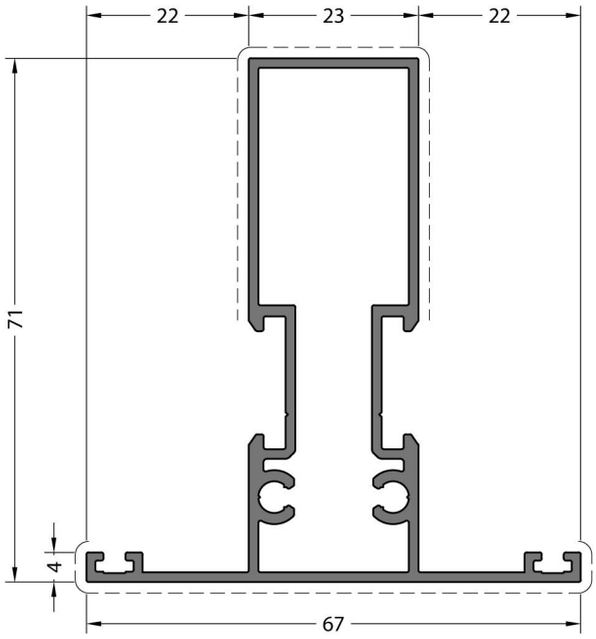


**CODE** / KOD

**40C-305-00**

**THEORETICAL WEIGHT kg/m**
TEORİK AĞIRLIK kg/m
**1.047**

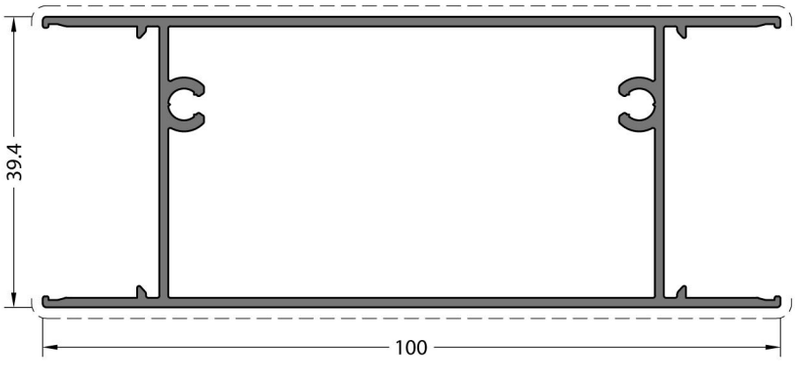


**CODE** / KOD

**40C-307-00**

**THEORETICAL WEIGHT kg/m**
TEORİK AĞIRLIK kg/m
**1.042**

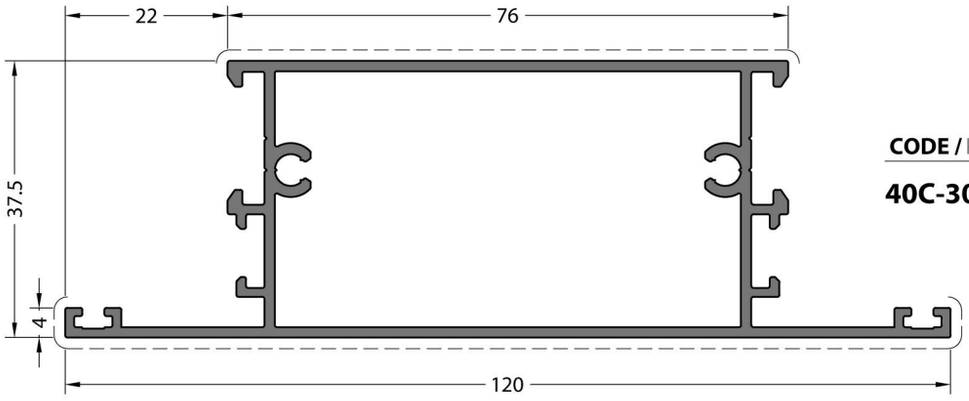


**CODE** / KOD

**40C-308-00**

**THEORETICAL WEIGHT kg/m**
TEORİK AĞIRLIK kg/m
**1.255**

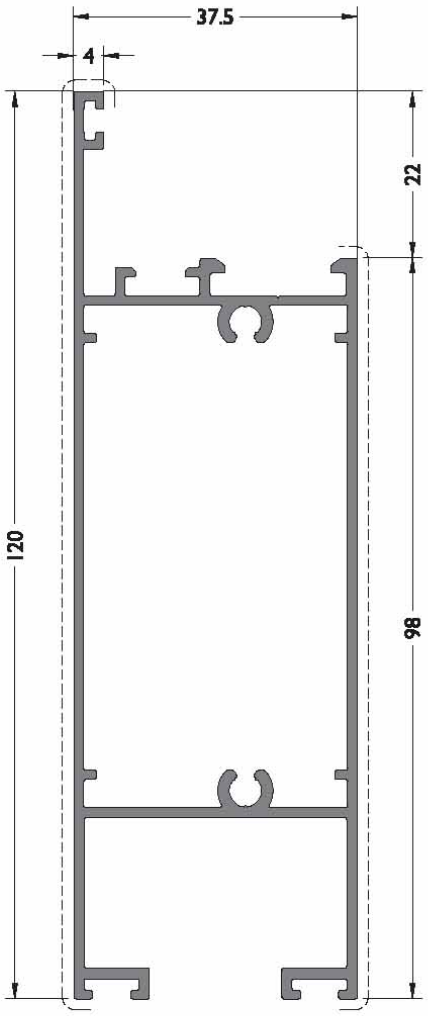


**CODE**
**40C-401-00**

**THEORETICAL WEIGHT kg/m**
**1.318**

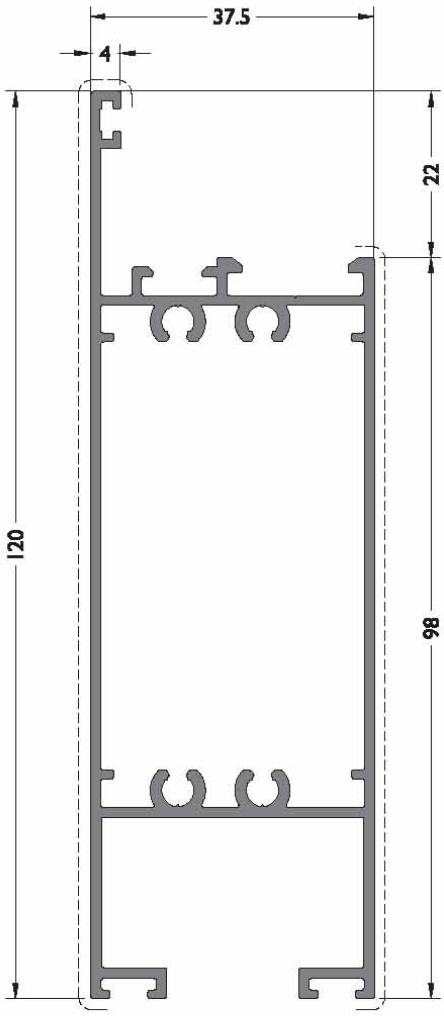


**CODE**
**40C-402-00**

**THEORETICAL WEIGHT kg/m**
**1.410**

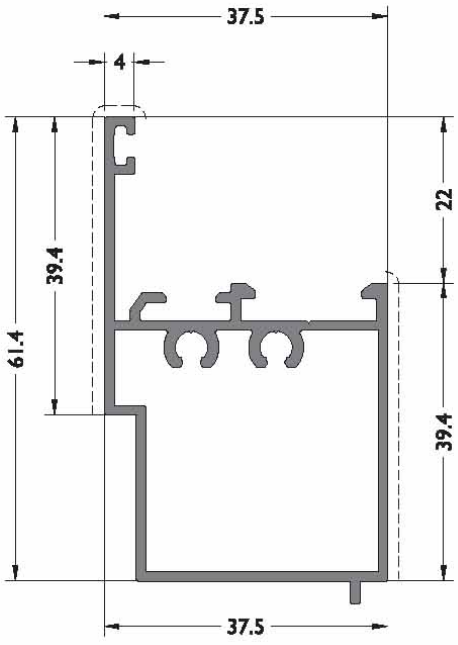


**CODE**
**40C-403-00**

**THEORETICAL WEIGHT kg/m**
**0.783**

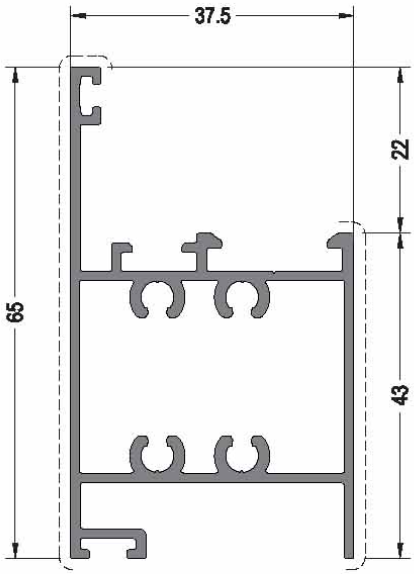


**CODE**
**40C-412-12**

**THEORETICAL WEIGHT kg/m**
**0.917**

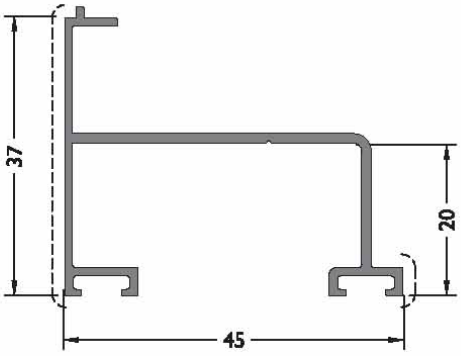


**CODE**
**40C-404-00**

**THEORETICAL WEIGHT kg/m**
**0.491**

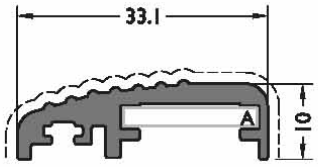


**CODE**
**40C-406-00**

**THEORETICAL WEIGHT kg/m**
**0.362**

**CORNER JOINT**



**A P 100.1**

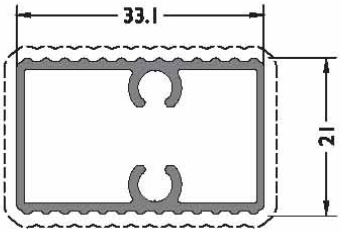


**CODE**
**40C-407-00**

**THEORETICAL WEIGHT kg/m**
**0.485**

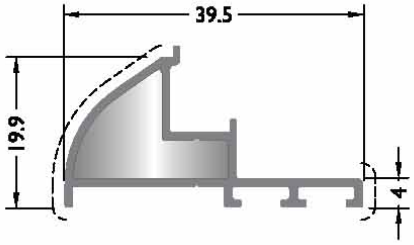


**CODE**
**07-212-00**

**THEORETICAL WEIGHT kg/m**
**0.363**

**ADAPTER CUP**



**EM07-212**

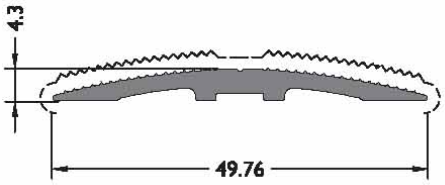


**CODE**
**20-101-00**

**THEORETICAL WEIGHT kg/m**
**0.355**

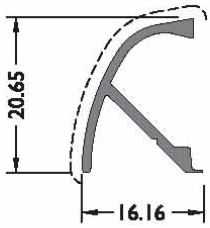


**CODE**
**07-211-00**

**THEORETICAL WEIGHT kg/m**
**0.184**

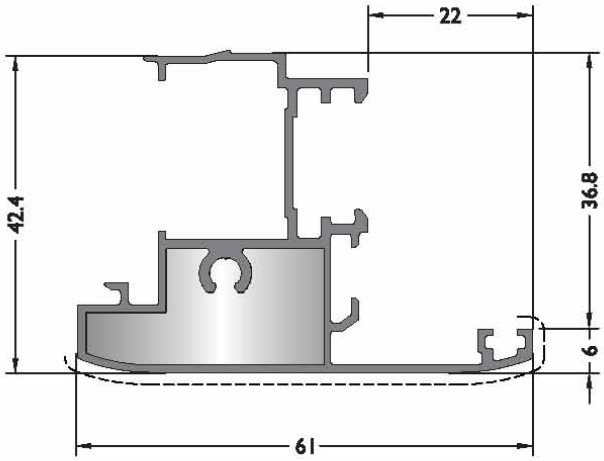


**CODE**

**40C-501-00**

**THEORETICAL WEIGHT kg/m**

**0.856**

**ADAPTER CUP**



EM40-501

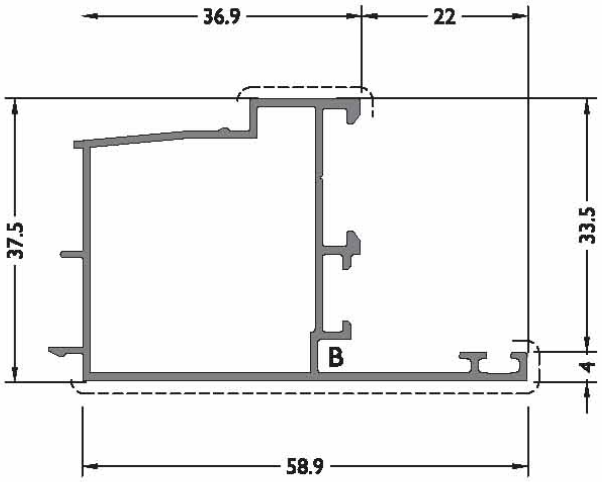


**CODE**

**40C-502-00**

**THEORETICAL WEIGHT kg/m**

**0.675**



**B** FUJI 2000

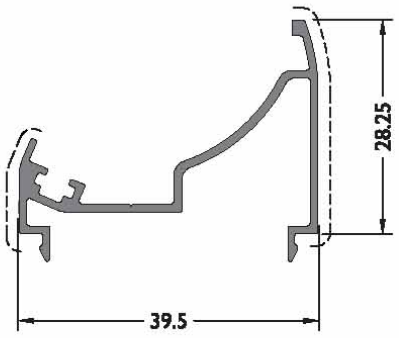


**CODE**

**40C-503-00**

**THEORETICAL WEIGHT kg/m**

**0.386**

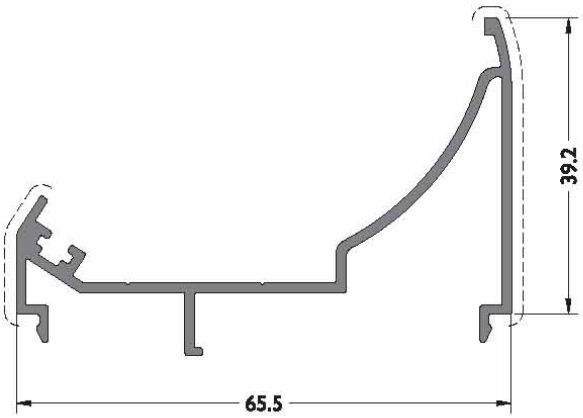


**CODE**
**40C-504-00**

**THEORETICAL WEIGHT kg/m**
**0.592**

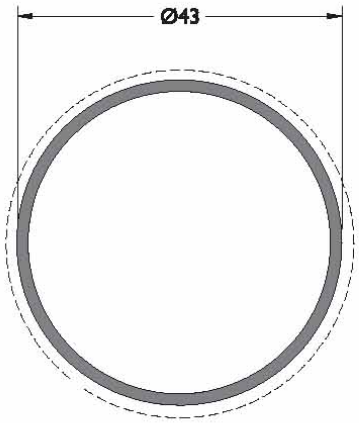


**CODE**
**10-127-015**

**THEORETICAL WEIGHT kg/m**
**0.530**

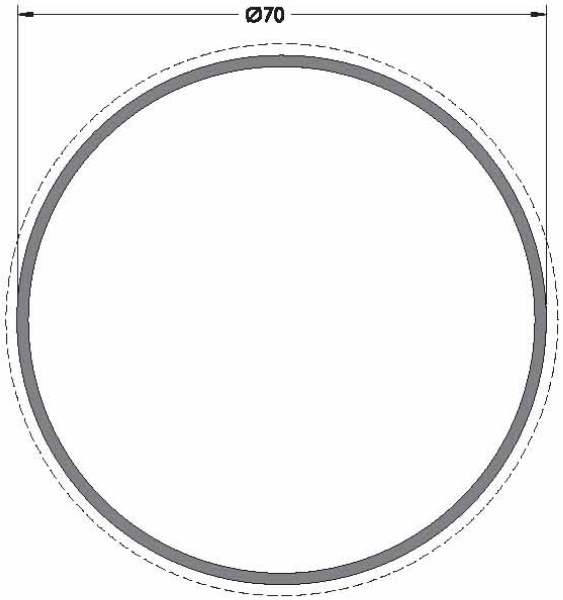


**CODE**
**10-134-015**

**THEORETICAL WEIGHT kg/m**
**0.875**

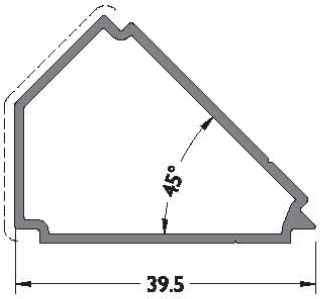


**CODE**
**40C-508-00**

**THEORETICAL WEIGHT kg/m**
**0.370**

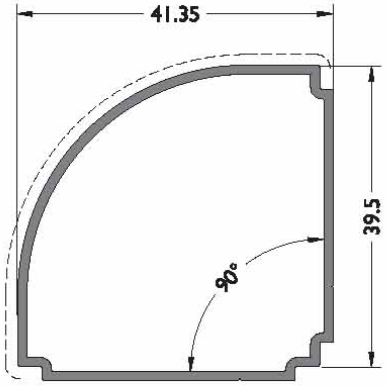


**CODE**
**40C-507-00**

**THEORETICAL WEIGHT kg/m**
**0.475**

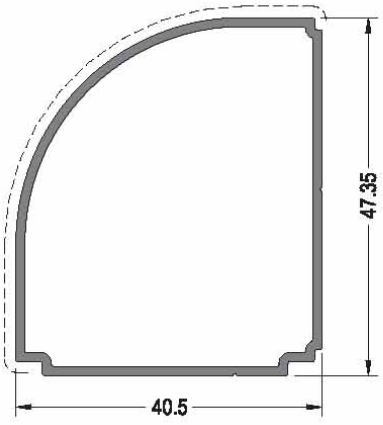


**CODE**
**40C-511-00**

**THEORETICAL WEIGHT kg/m**
**0.507**

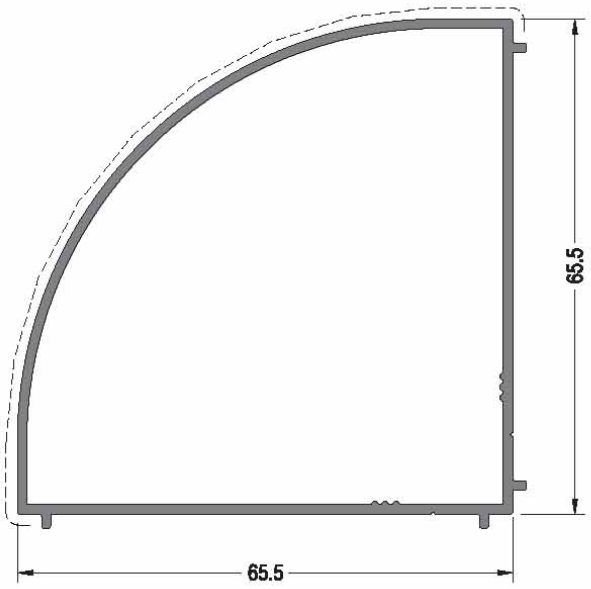


**CODE**
**40C-509-00**

**THEORETICAL WEIGHT kg/m**
**0.816**

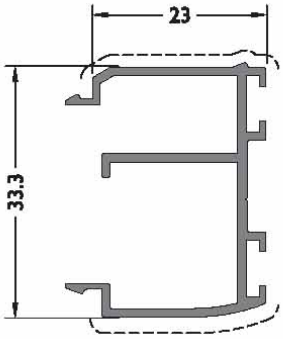


**CODE**
**40C-510-00**

**THEORETICAL WEIGHT kg/m**
**0.446**

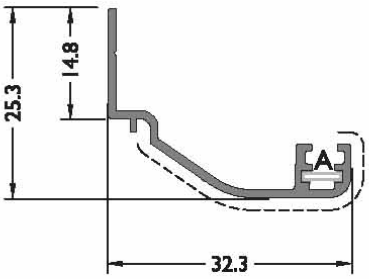


**CODE**
**07-101-00**

**THEORETICAL WEIGHT kg/m**
**0.237**

**CORNER JOINT**



**A** M0 19

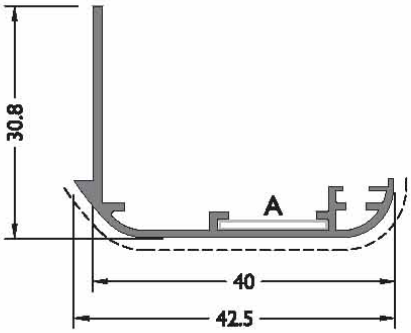


**CODE**
**07-102-00**

**THEORETICAL WEIGHT kg/m**
**0.325**

**CORNER JOINT**



**A** MO 20.1

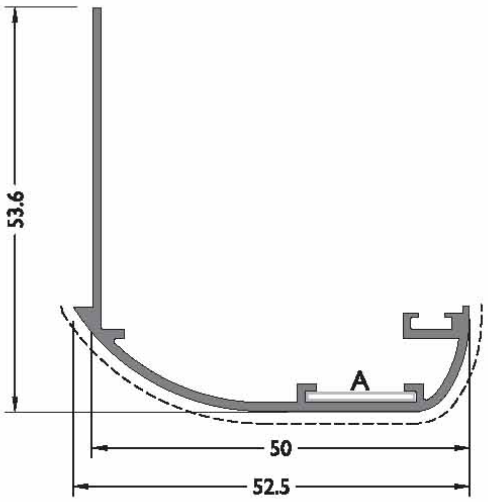


**CODE**
**07-103-00**

**THEORETICAL WEIGHT kg/m**
**0.490**

**CORNER JOINT**



**A** MO 20.1

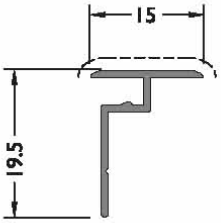


**CODE**
**07-201-00**

**THEORETICAL WEIGHT kg/m**
**0.119**

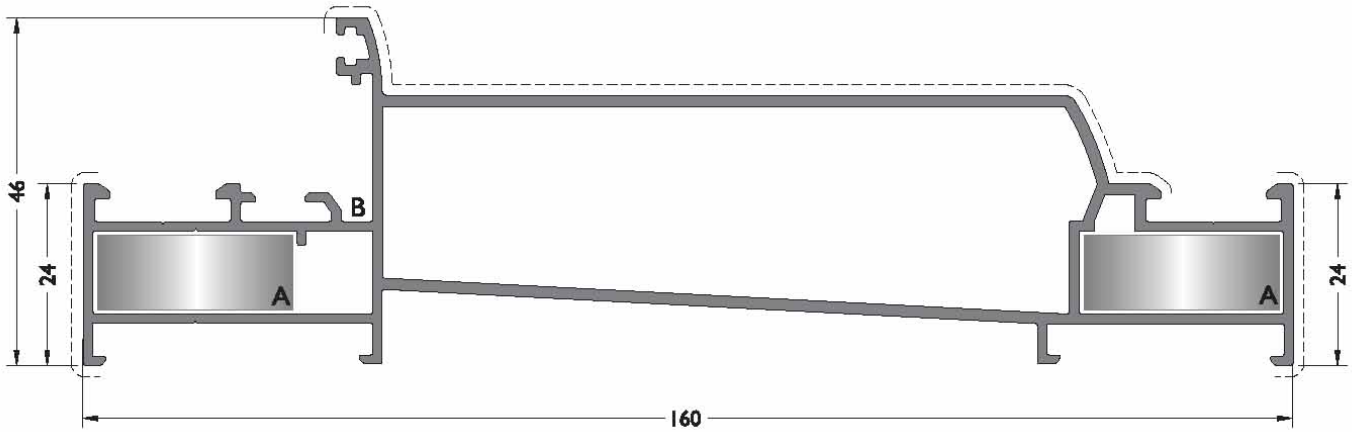


**CODE**

**40C-105-00**

**THEORETICAL WEIGHT kg/m**

**1.786**

**EXTRUDED CORNER JOINT**



**A** CC-101-26.5



**B** FUJI 2000

**DIE-CAST CORNER JOINT**



LC-1127

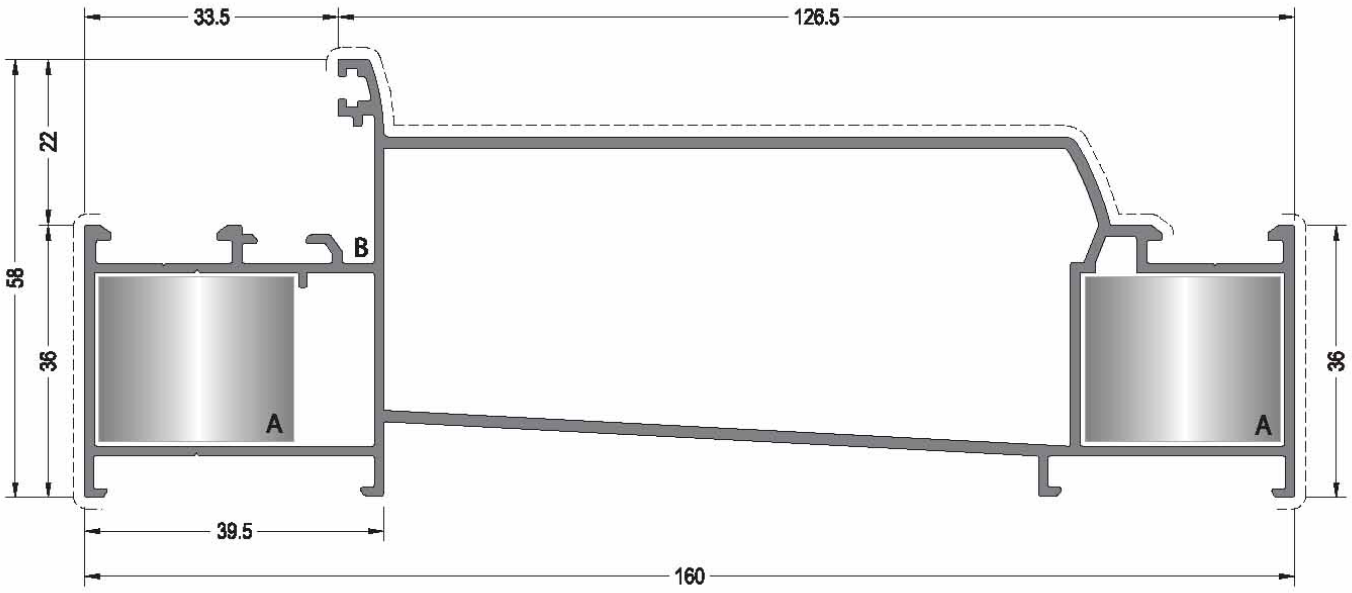


**CODE**

**40C-115-00**

**THEORETICAL WEIGHT kg/m**

**1.948**

**EXTRUDED CORNER JOINT**



**A** CC-103-26 5



**B** LC- 174

**DIE-CAST CORNER JOINT**



LC-2327

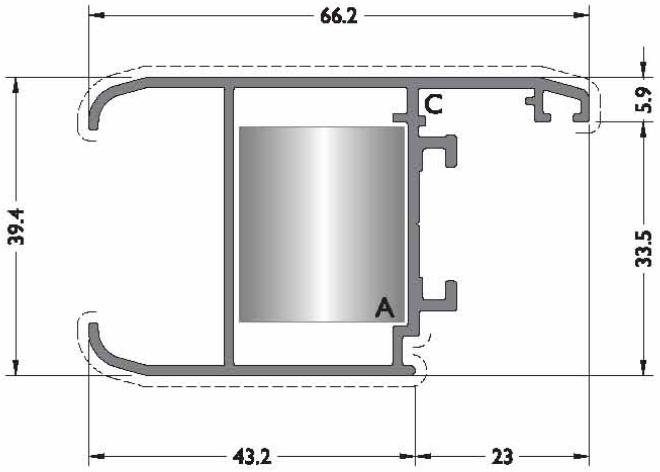


**CODE**
**40C-206-00**

**THEORETICAL WEIGHT kg/m**
**0.795**

**EXTRUDED CORNER JOINT**



**A** CC-103-26.5



**C** MO 20

**DIE-CAST CORNER JOINT**



LC-2327

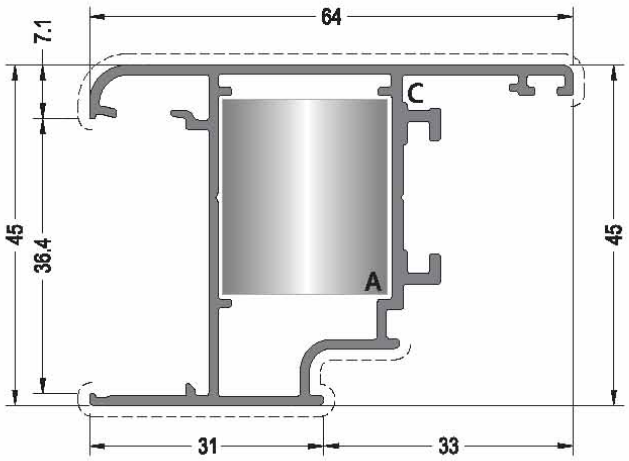


**CODE**
**40C-207-00**

**THEORETICAL WEIGHT kg/m**
**0.814**

**EXTRUDED CORNER JOINT**



**A** CC-103-26.5



**C** PK 20

**DIE-CAST CORNER JOINT**



LC-2327

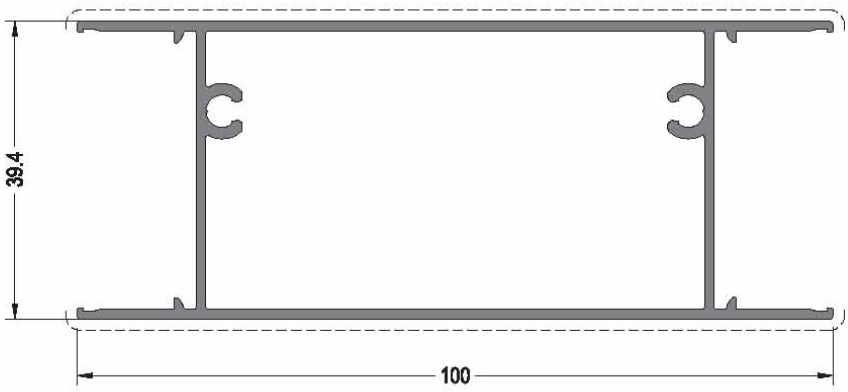


**CODE**
**40C-307-00**

**THEORETICAL WEIGHT kg/m**
**1.042**

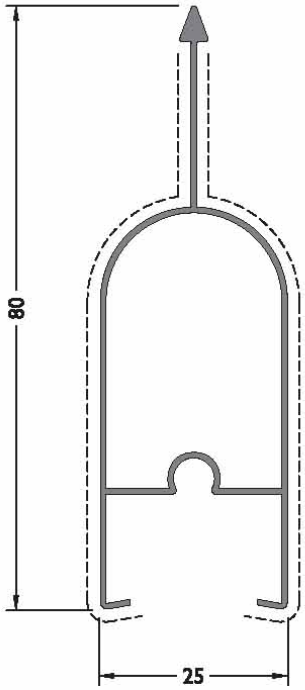


**CODE**
**07-301-00**

**THEORETICAL WEIGHT kg/m**
**0.516**

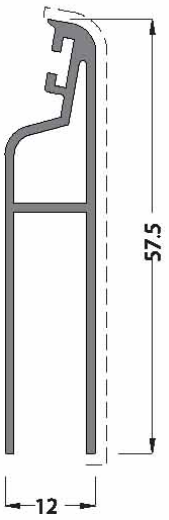


**CODE**
**1258**

**THEORETICAL WEIGHT kg/m**
**0.450**

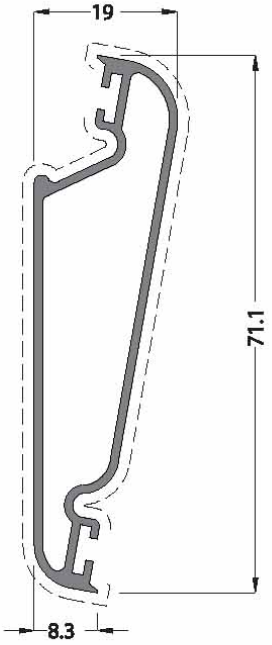


**CODE**
**1259**

**THEORETICAL WEIGHT kg/m**
**0.529**

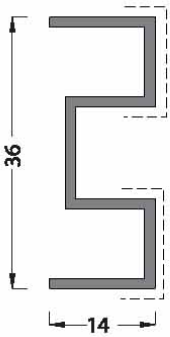


**CODE**
**1260**

**THEORETICAL WEIGHT kg/m**
**0.308**

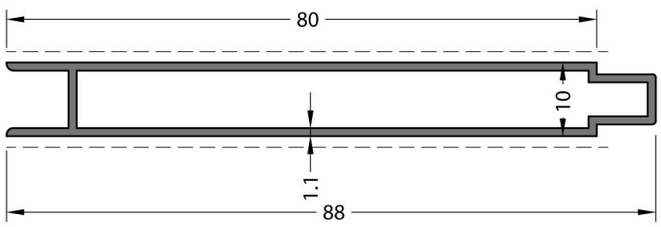


**CODE** / KOD
**07-131-011**

**THEORETICAL WEIGHT kg/m**
TEORİK AĞIRLIK kg/m
**0.568**

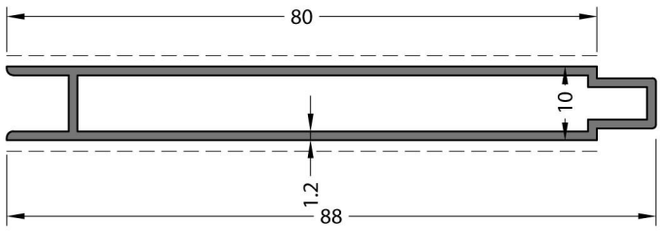


**CODE** / KOD
**07-131-012**

**THEORETICAL WEIGHT kg/m**
TEORİK AĞIRLIK kg/m
**0.618**

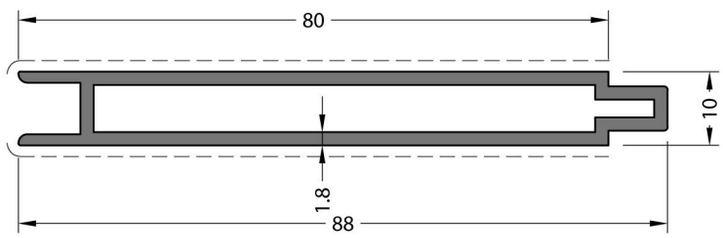


**CODE** / KOD
**07-131-018**

**THEORETICAL WEIGHT kg/m**
TEORİK AĞIRLIK kg/m
**0.902**

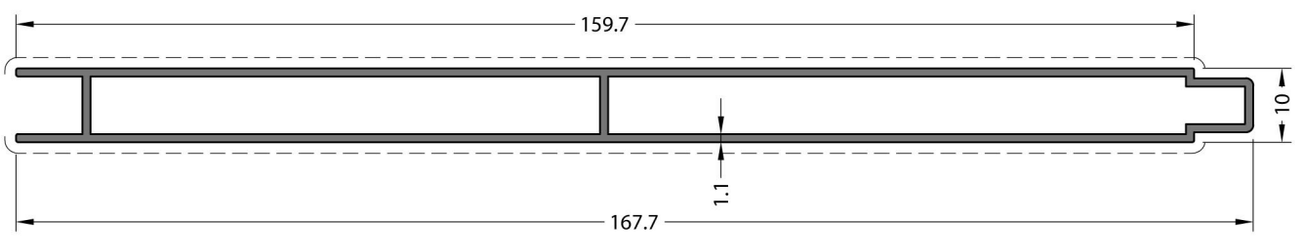


**CODE** / KOD
**07-133-011**

**THEORETICAL WEIGHT kg/m**
TEORİK AĞIRLIK kg/m
**1.064**

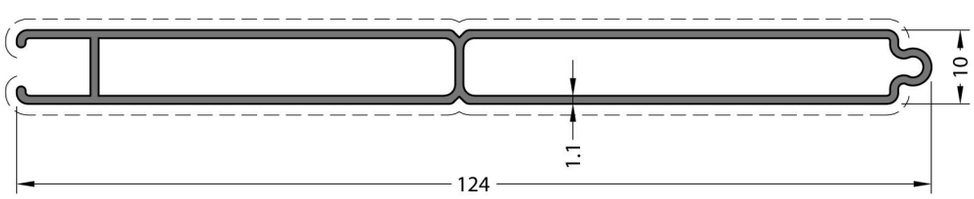


**CODE** / KOD
**07-132-011**

**THEORETICAL WEIGHT kg/m**
TEORİK AĞIRLIK kg/m
**0.802**

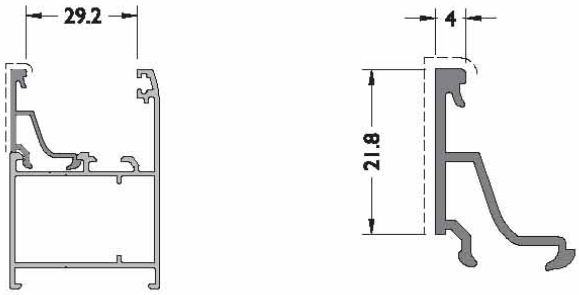


**CODE**
**08-101-00**

**THEORETICAL WEIGHT kg/m**
**0.217**

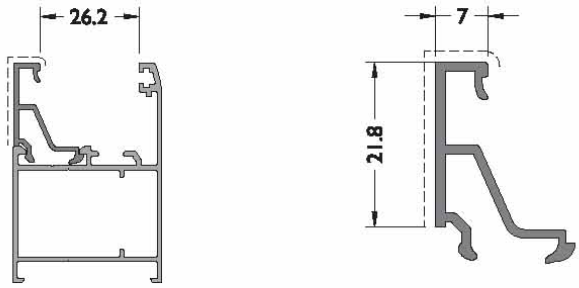


**CODE**
**08-102-00**

**THEORETICAL WEIGHT kg/m**
**0.223**

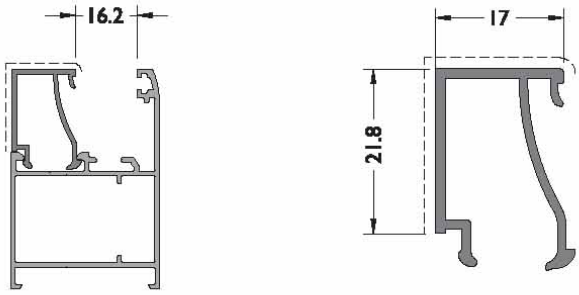


**CODE**
**08-107-00**

**THEORETICAL WEIGHT kg/m**
**0.261**

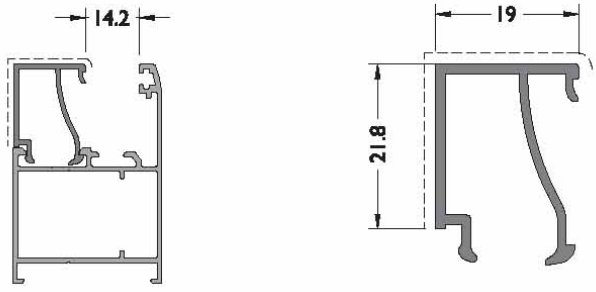


**CODE**
**08-108-00**

**THEORETICAL WEIGHT kg/m**
**0.269**

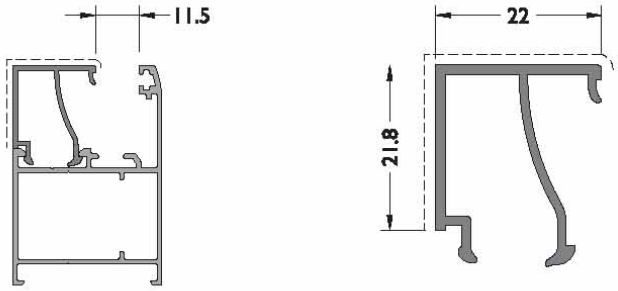


**CODE**
**08-109-00**

**THEORETICAL WEIGHT kg/m**
**0.279**

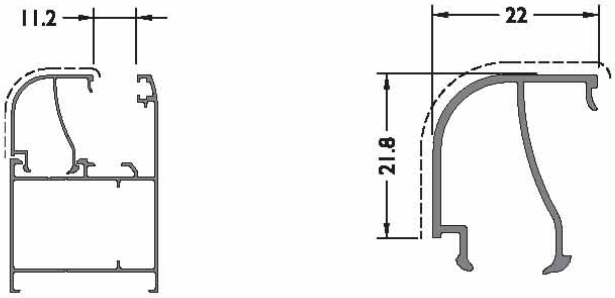


**CODE**
**08-110-00**

**THEORETICAL WEIGHT kg/m**
**0.264**

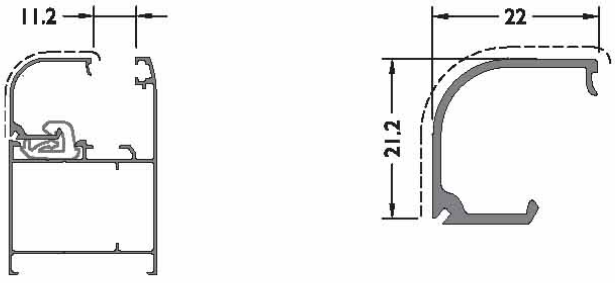


**CODE**
**08-111-00**

**THEORETICAL WEIGHT kg/m**
**0.217**

**PVC ADAPTER**



EM08-111

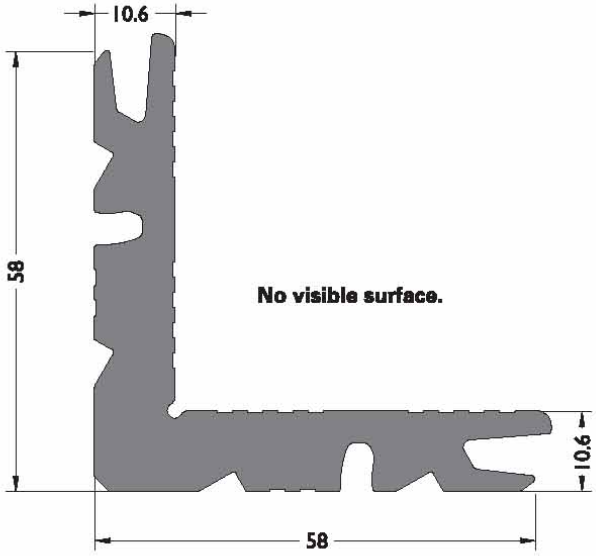


**CODE**
**09-101-00**

**THEORETICAL WEIGHT kg/m**
**2.570**

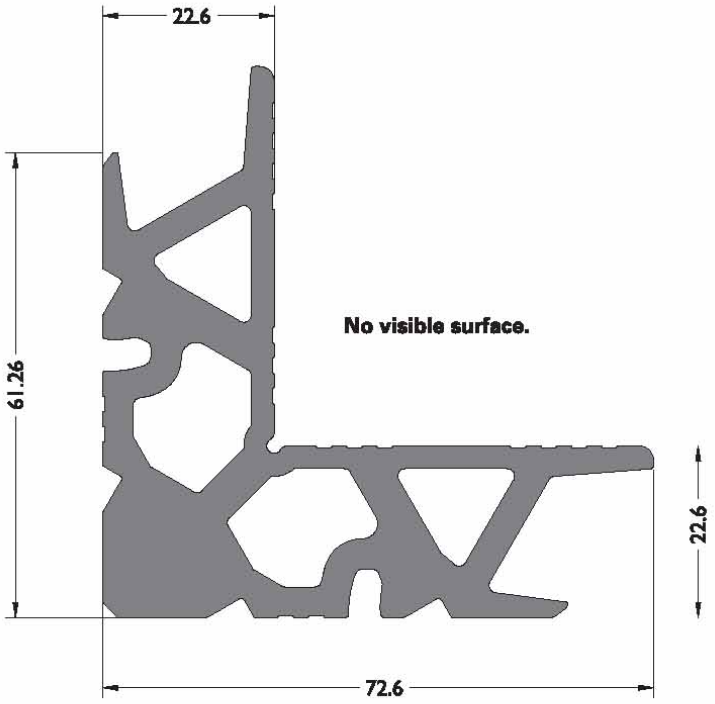


**CODE**
**09-103-00**

**THEORETICAL WEIGHT kg/m**
**3.702**

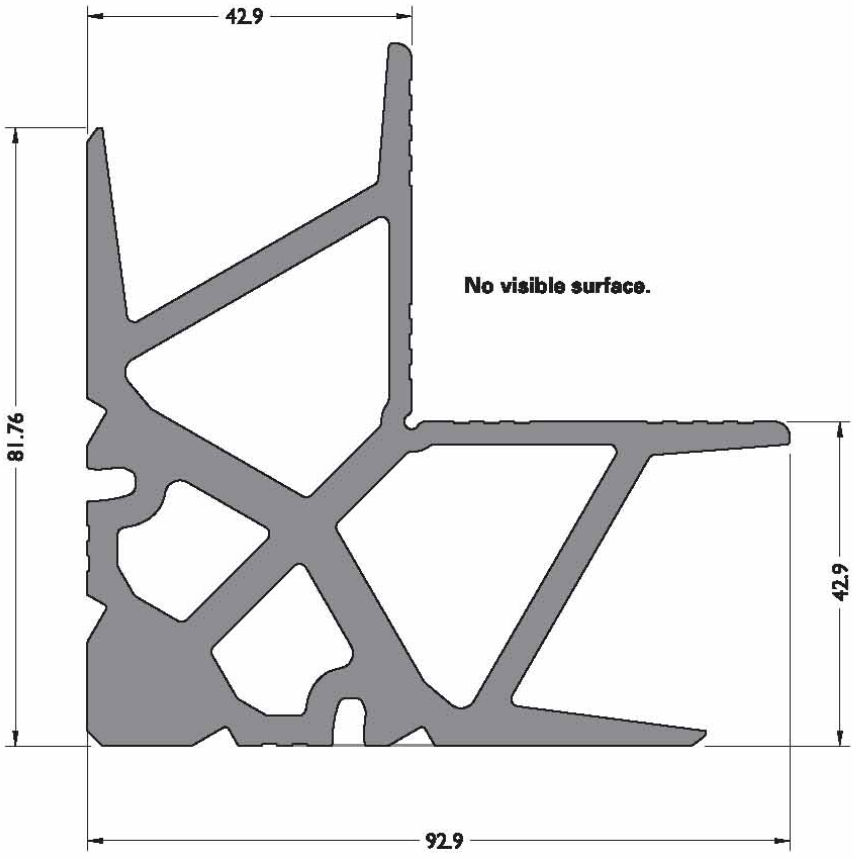


**CODE**
**09-105-00**

**THEORETICAL WEIGHT kg/m**
**5.473**

Perimetric**profiles**

Perimetric**profiles**

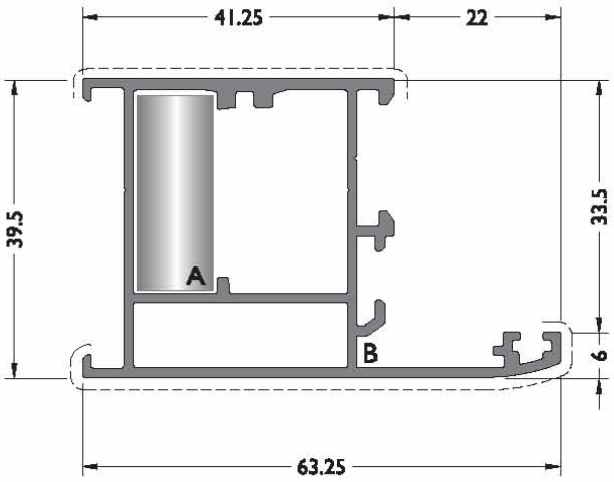


**CODE**

## 40C-151-00

**THEORETICAL WEIGHT kg/m**

**0.877**

**EXTRUDED CORNER JOINT**


**A** CC-101-26.5


**B** FUJI 2000

**DIE-CAST CORNER JOINT**


LC-1127

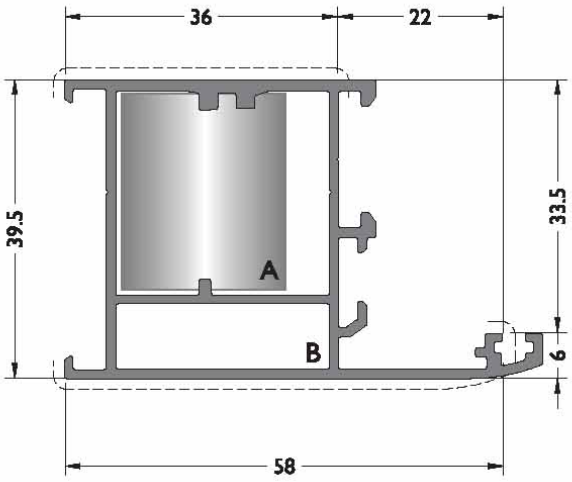


**CODE**

## 40C-103-00

**THEORETICAL WEIGHT kg/m**

**0.701**

**EXTRUDED CORNER JOINT**


**A** CC-156-26.5


**B** FUJI 2000

**DIE-CAST CORNER JOINT**


LC-2327

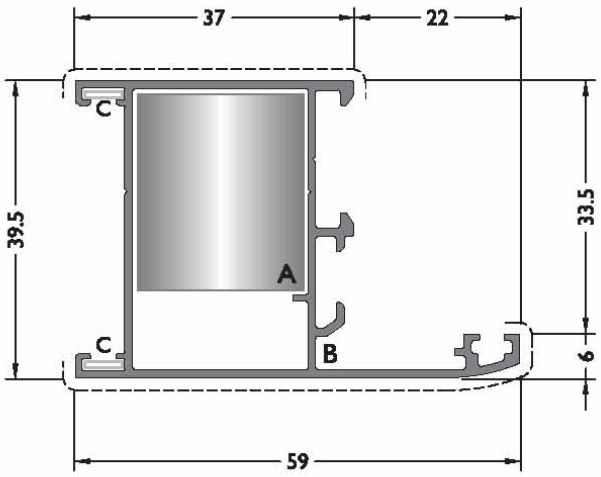


**CODE**

## 40C-106-00

**THEORETICAL WEIGHT kg/m**

**0.723**

**EXTRUDED CORNER JOINT**


**A** CC-156-26.5


**B** FUJI 2000


**C** MO 19

**DIE-CAST CORNER JOINT**


LC-2327

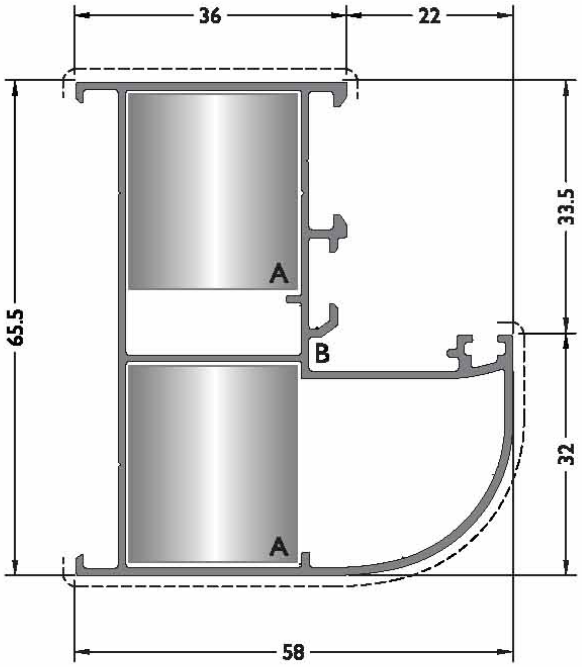


**CODE**

## 40C-104-00

**THEORETICAL WEIGHT kg/m**

**1.050**

| EXTRUDED CORNER JOINT | DIE-CAST CORNER JOINT |
|---|---|
|  **A** CC-156-26.5 |  LC-2327 |
|  **B** FUJI 2000 | |

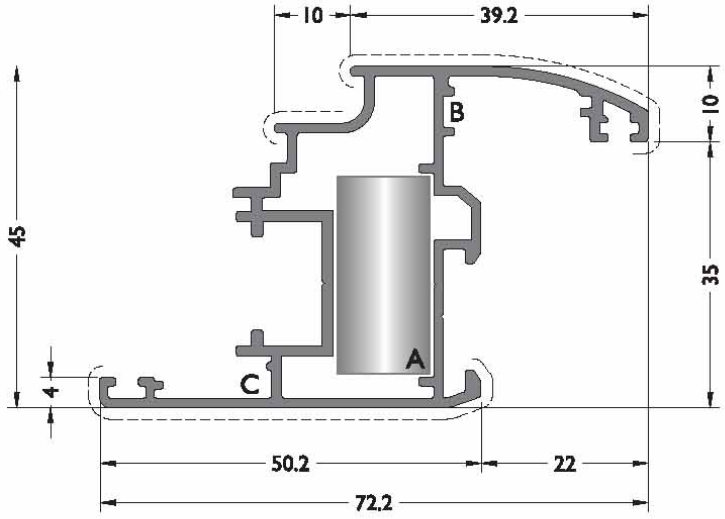


**CODE**

## 40C-251-00

**THEORETICAL WEIGHT kg/m**

**0.927**

| EXTRUDED CORNER JOINT | DIE-CAST CORNER JOINT |
|---|---|
|  **A** CC-102-26.5 |  LC-1327 |
|  **B** FUJI 2000 | |
|  **C** MO 20 | |

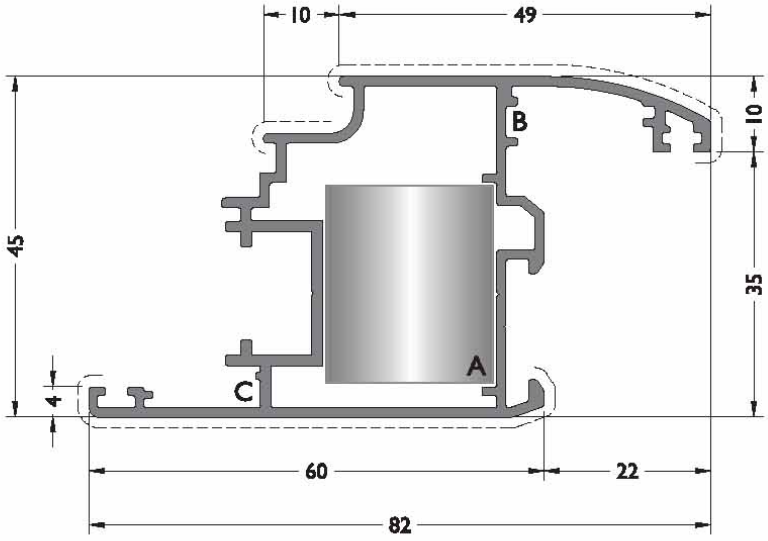


**CODE**

## 40C-252-00

**THEORETICAL WEIGHT kg/m**

**0.996**

| EXTRUDED CORNER JOINT | DIE-CAST CORNER JOINT |
|---|---|
|  **A** CC-156-26.5 |  LC-2327 |
|  **B** FUJI 2000 | |
|  **C** MO 20 | |

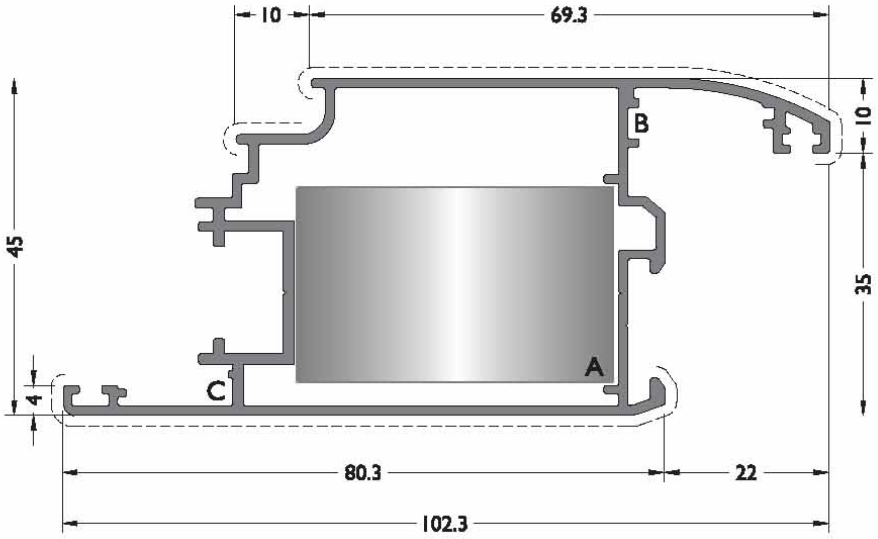


**CODE**
**40C-253-00**

**THEORETICAL WEIGHT kg/m**
**1.141**

**EXTRUDED CORNER JOINT**


**A** CC-105-26.5


**B** FUJI 2000


**C** MO 20

**DIE-CAST CORNER JOINT**


LC-4327

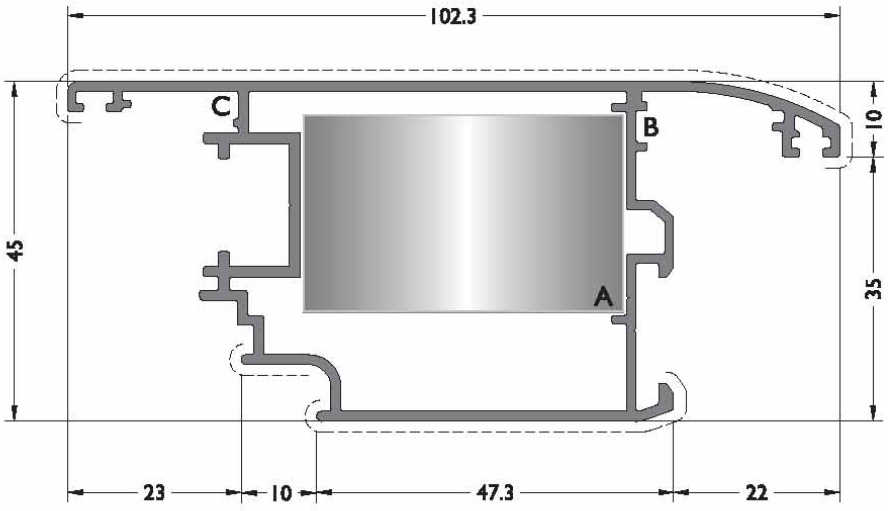


**CODE**
**40C-254-00**

**THEORETICAL WEIGHT kg/m**
**1.141**

**EXTRUDED CORNER JOINT**


**A** CC-105-26.5


**B** FUJI 2000


**C** MO 20

**DIE-CAST CORNER JOINT**


LC-4327

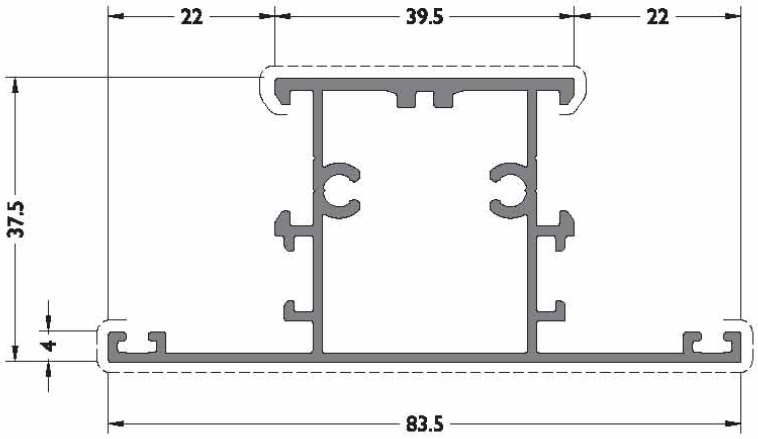


**CODE**
**40C-351-00**

**THEORETICAL WEIGHT kg/m**
**0.973**

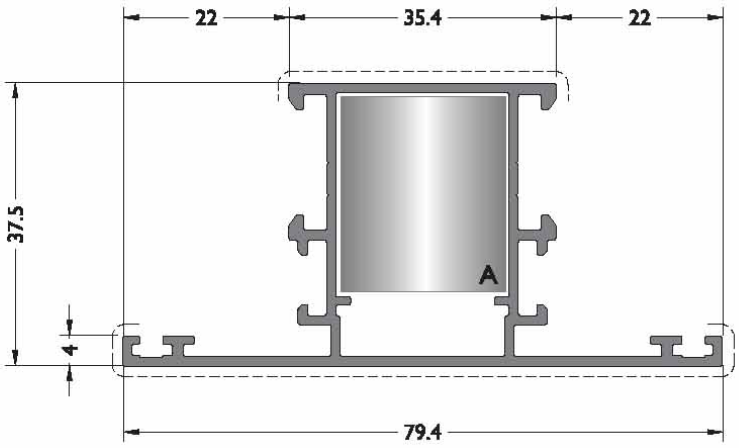


**CODE**

**40C-302-00**

**THEORETICAL WEIGHT kg/m**

**0.831**

**EXTRUDED CORNER JOINT**



**A** CC-156-26.5



**B** FUJI 2000

**DIE-CAST CORNER JOINT**



LC-2327

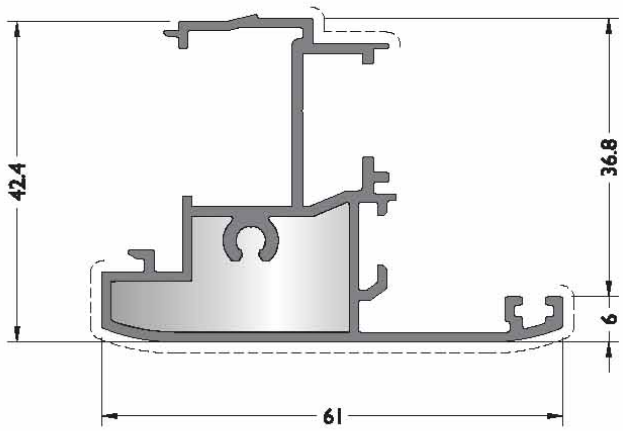


**CODE**

**40C-551-00**

**THEORETICAL WEIGHT kg/m**

**0.852**

**ADAPTER CUP**



EM40-551

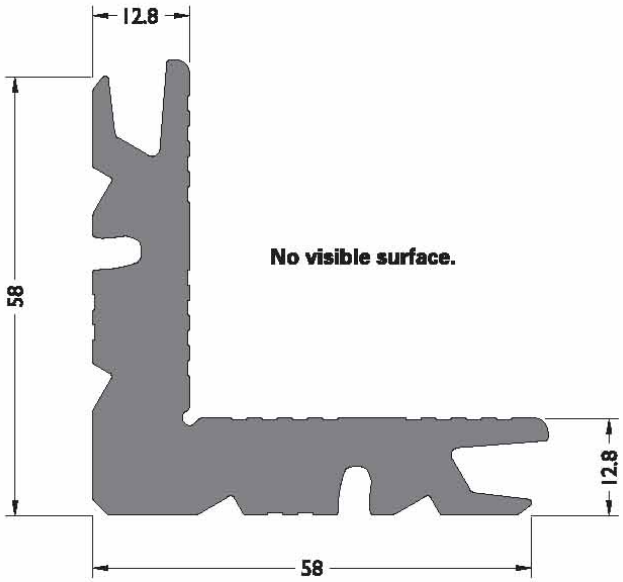


**CODE**

**09-102-00**

**THEORETICAL WEIGHT kg/m**

**2.995**

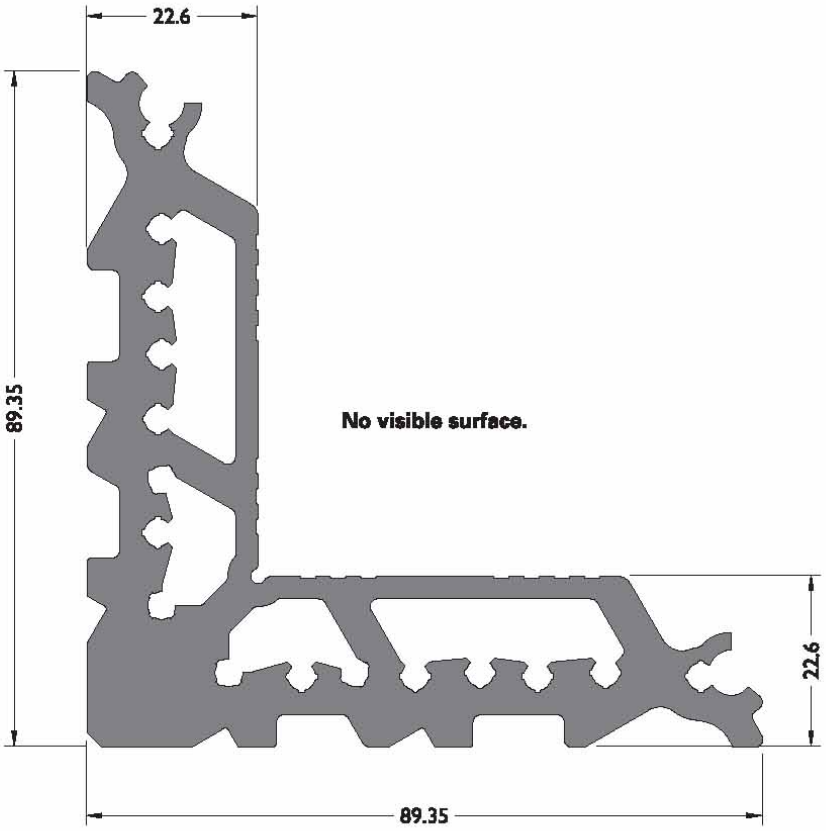


**CODE**

**09-156-00**

**THEORETICAL WEIGHT kg/m**

**5.101**

Aluminium**details**

Aluminium**details**

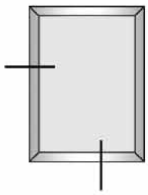

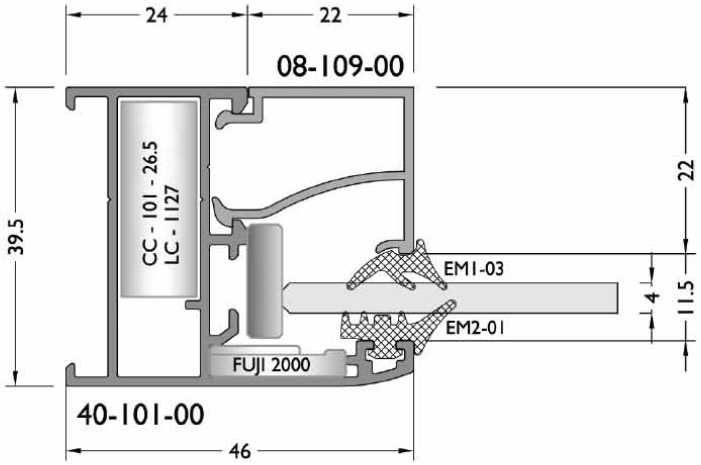
24
22
08-109-00
39.5
CC - 101 - 26.5
LC - 1127
22
EM1-03
4
11.5
EM2-01
FUJI 2000
40-101-00
46

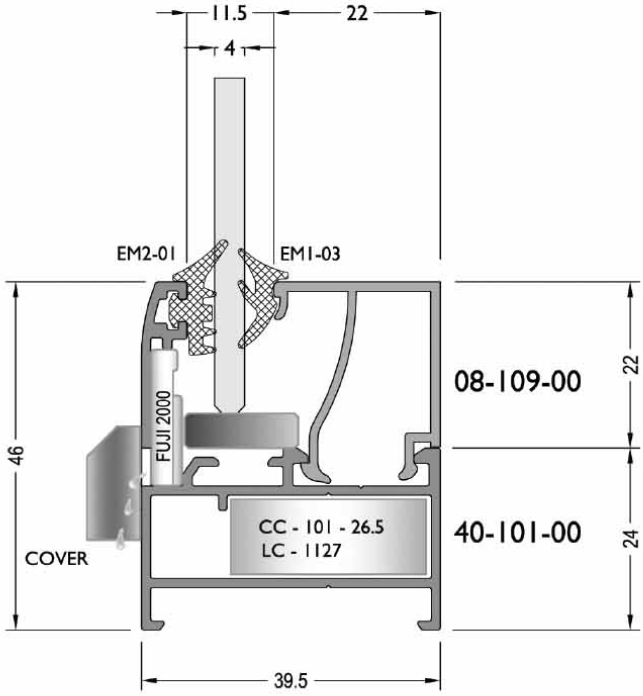
11.5
22
4
EM2-01
EM1-03
46
FUJI 2000
08-109-00
22
CC - 101 - 26.5
LC - 1127
40-101-00
24
COVER
39.5

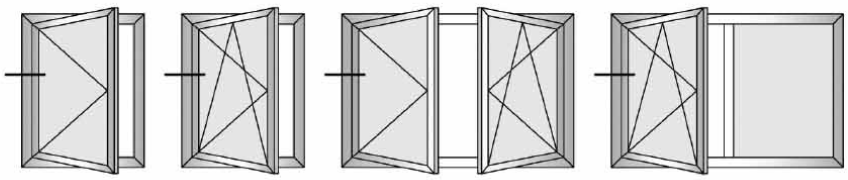

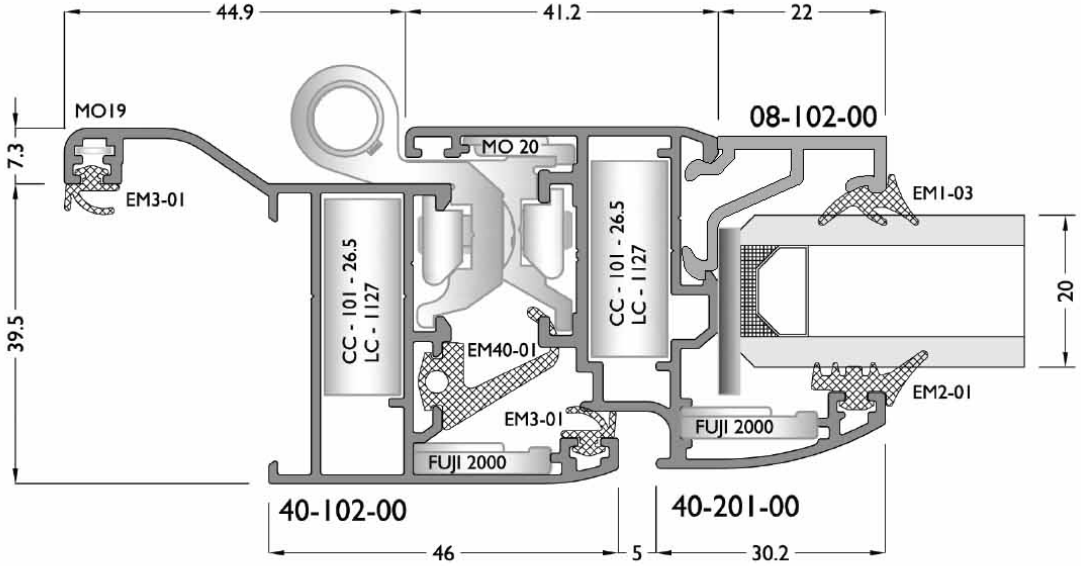
44.9
41.2
22
MO19
08-102-00
7.3
MO 20
EM3-01
EM1-03
CC - 101 - 26.5
LC - 1127
CC - 101 - 26.5
LC - 1127
39.5
20
EM40-01
EM2-01
EM3-01
FUJI 2000
FUJI 2000
40-102-00
40-201-00
46
5
30.2

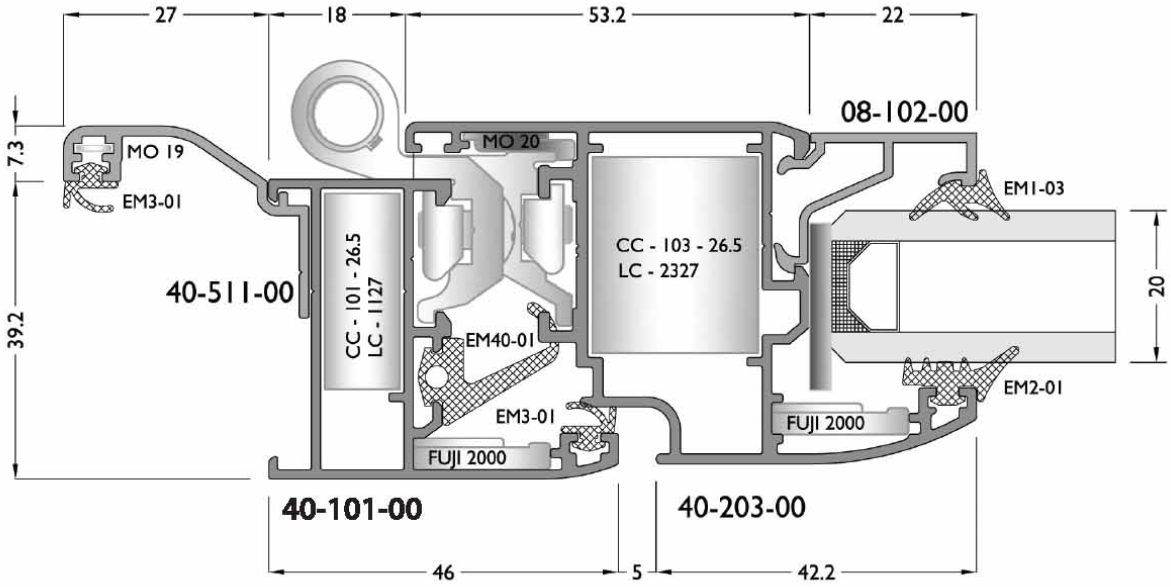
27
18
53.2
22
08-102-00
7.3
MO 20
MO 19
EM3-01
EM1-03
CC - 103 - 26.5
LC - 2327
40-511-00
CC - 101 - 26.5
LC - 1127
39.2
20
EM40-01
EM2-01
EM3-01
FUJI 2000
FUJI 2000
40-101-00
40-203-00
46
5
42.2

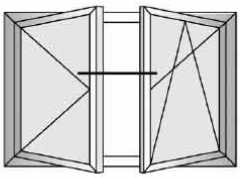

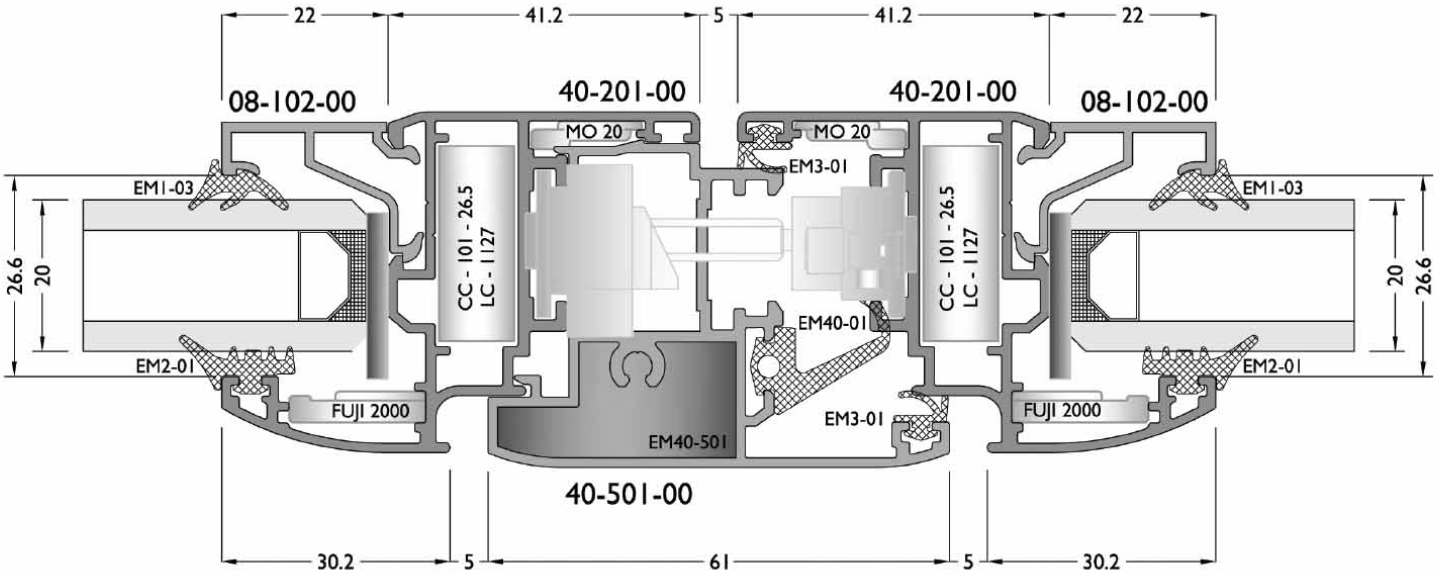
22
41.2
5
41.2
22
08-102-00
40-201-00
40-201-00
08-102-00
MO 20
MO 20
EM3-01
EM1-03
EM1-03
CC - 101 - 26.5
LC - 1127
CC - 101 - 26.5
LC - 1127
26.6
20
20
26.6
EM40-01
EM2-01
EM2-01
FUJI 2000
FUJI 2000
EM3-01
EM40-501
40-501-00
30.2
5
61
5
30.2

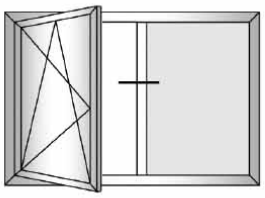

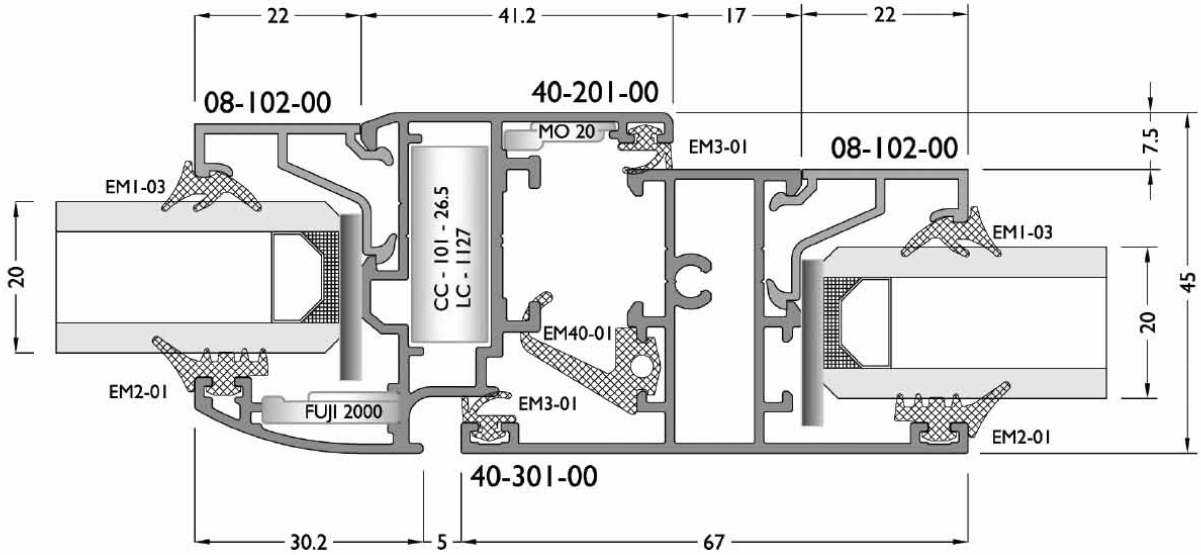
22
41.2
17
22
08-102-00
40-201-00
MO 20
EM3-01
08-102-00
7.5
EM1-03
EM1-03
CC - 101 - 26.5
LC - 1127
20
45
20
EM40-01
EM2-01
FUJI 2000
EM3-01
EM2-01
40-301-00
30.2
5
67

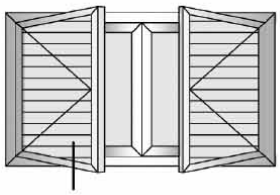


07-301-00
80
CC - 103 - 26.5
LC - 2327
40-206-00
MO 20
EM3-01
CC - 101 - 26.5
LC - 1127
COVER
40-105-00
26.5
20
EM2-01
EM1-03
08-102-00
22
FUJI 2000
CC - 101 - 26.5
LC - 1127
40-201-00
EM3-01
41.2
EM40-01
MO 20
FUJI 2000
EM3-01
CC - 101 - 26.5
LC - 1127
18
160
7.5

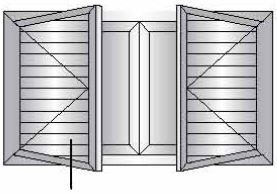


1259
1259
1258
1260
60
47
64
18
26.5
20
EM2-01
EM1-02
08-102-00
FUJI 2000
40C-201-00
40C-207-00
CC - 103 - 26.5
LC - 2327
85
CC - 101 - 26.5
LC - 1127
40C-105-00
EM40-01
MO 20
EM3-01
CC - 101 - 26.5
LC - 1127
CC - 101 - 26.5
LC - 1127
EM3-01
160
7.5

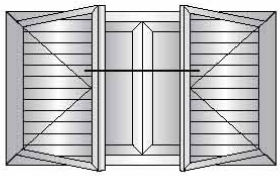

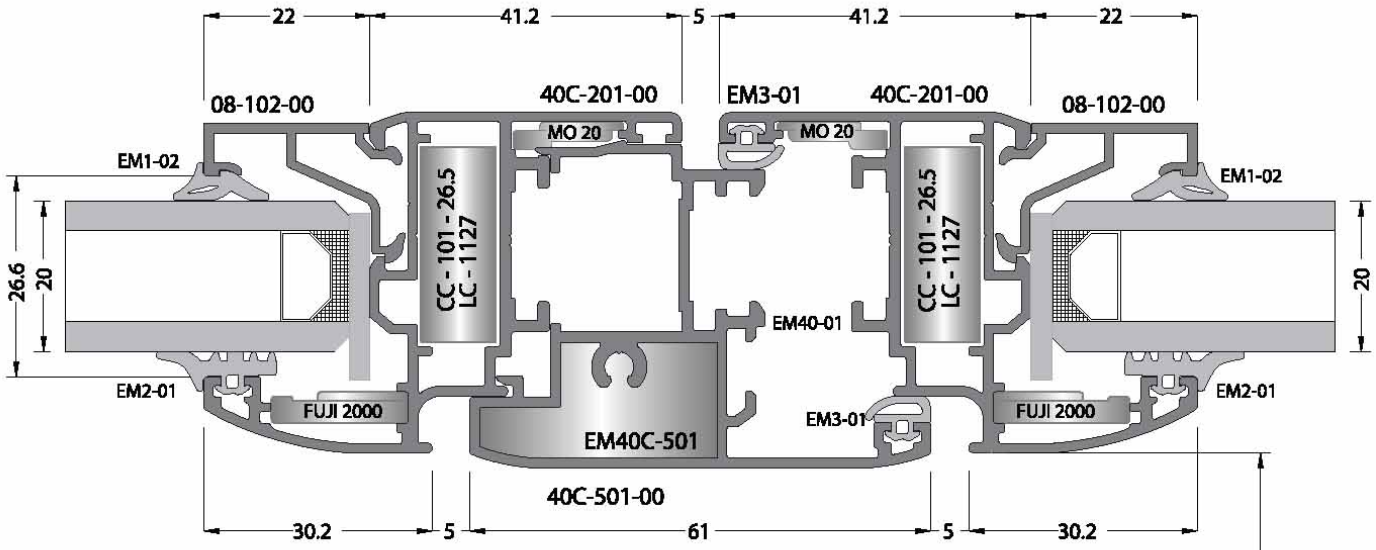


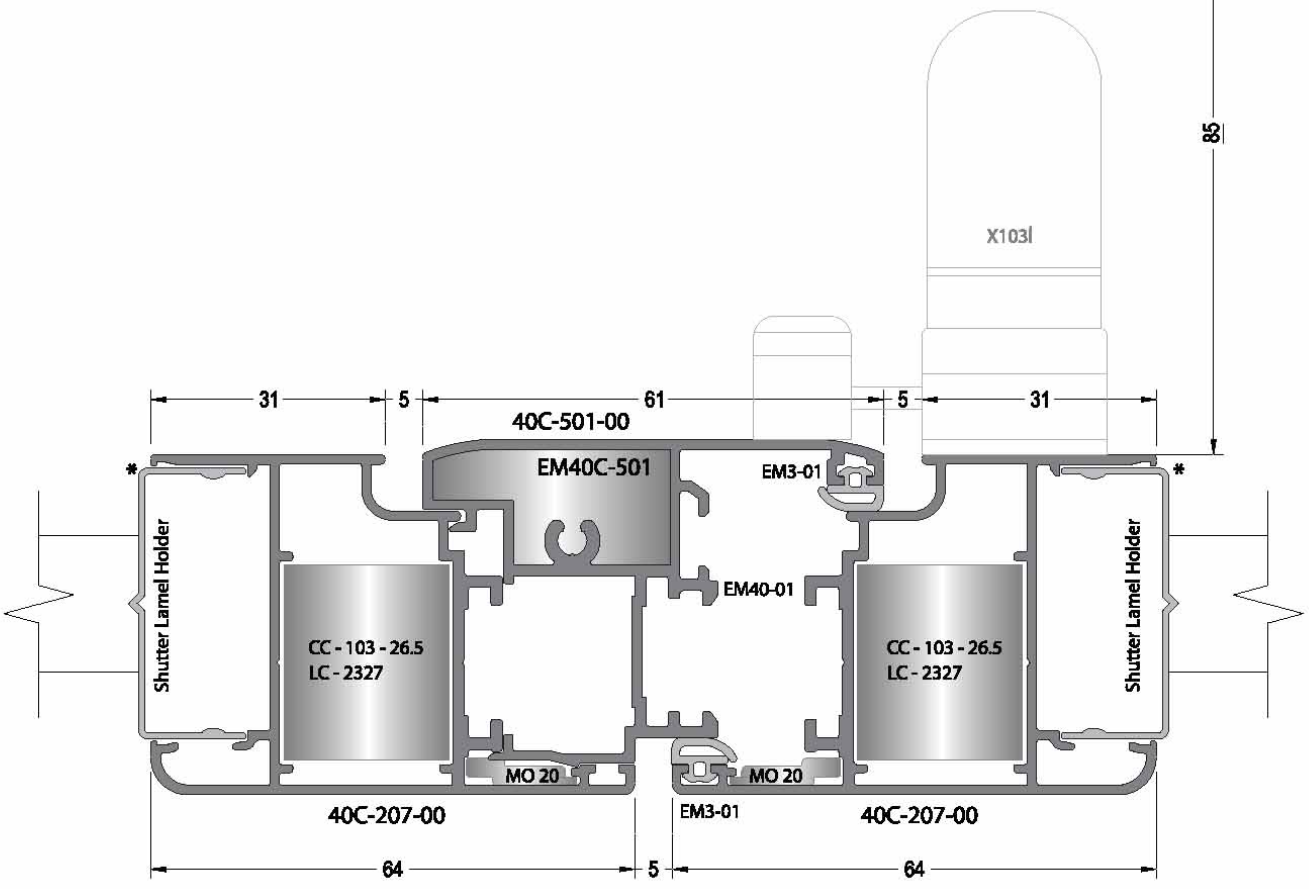


*Shutter Lamel Holder: Please contact with sales department.

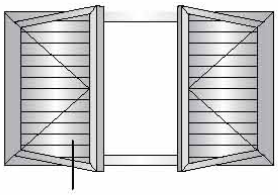

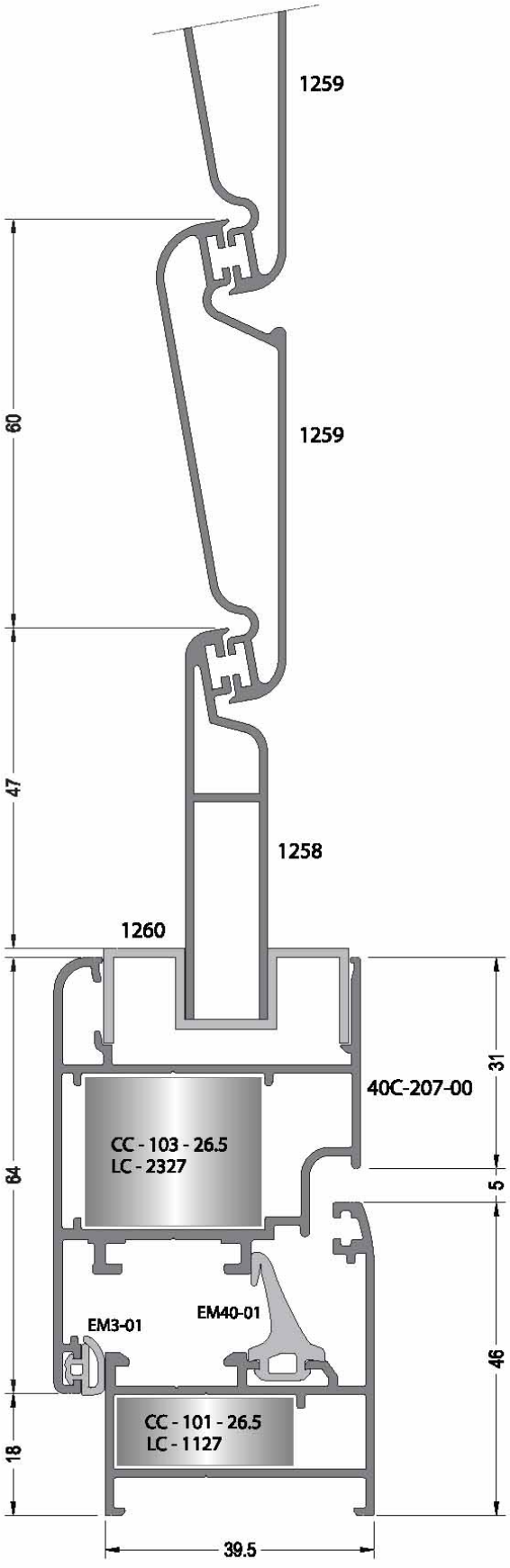
1259
1259
1258
1260
60
47
84
18
31
5
46
40C-207-00
CC - 103 - 26.5
LC - 2327
EM3-01
EM40-01
CC - 101 - 26.5
LC - 1127
39.5

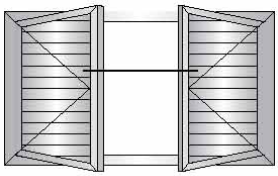

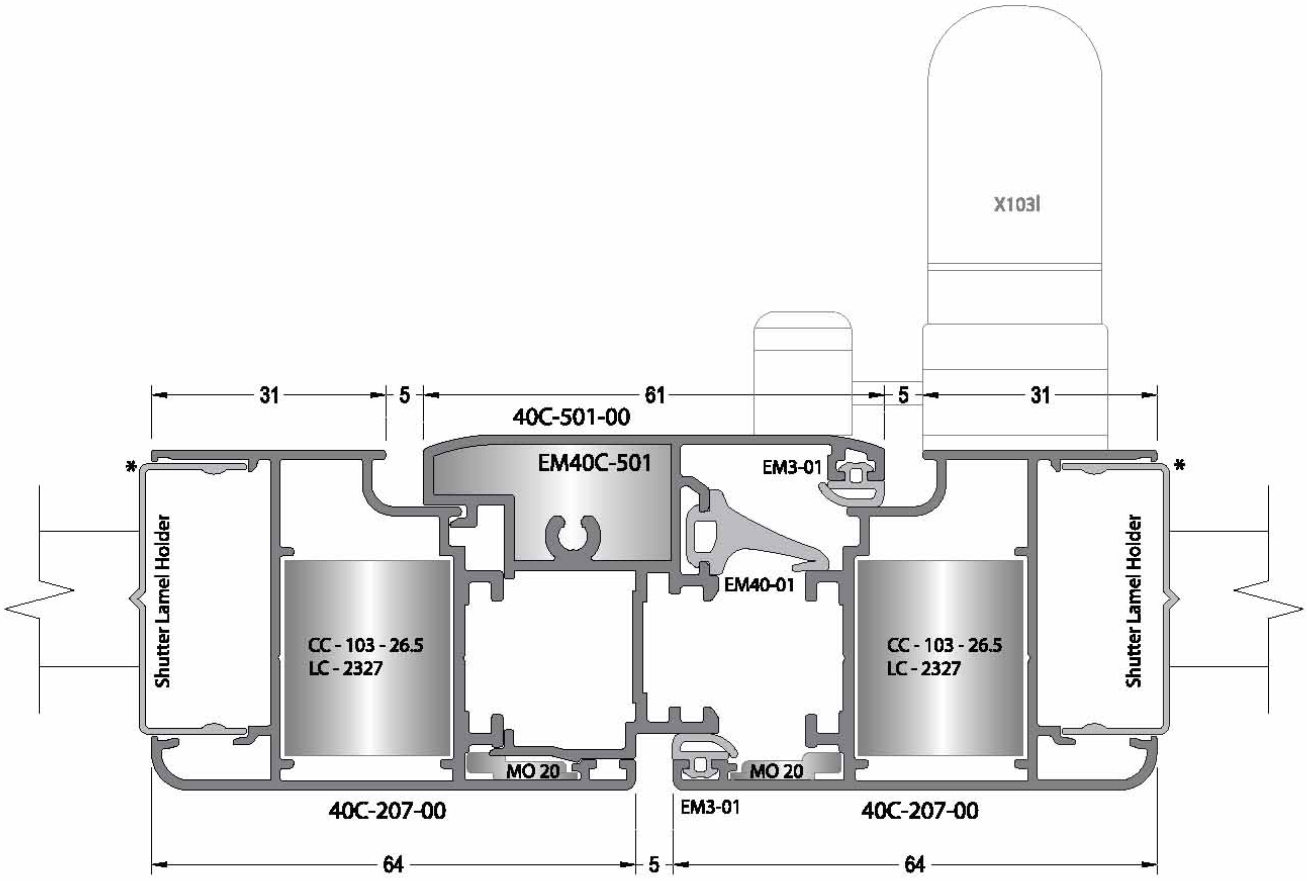


*Shutter Lamel Holder: Please contact with sales department.

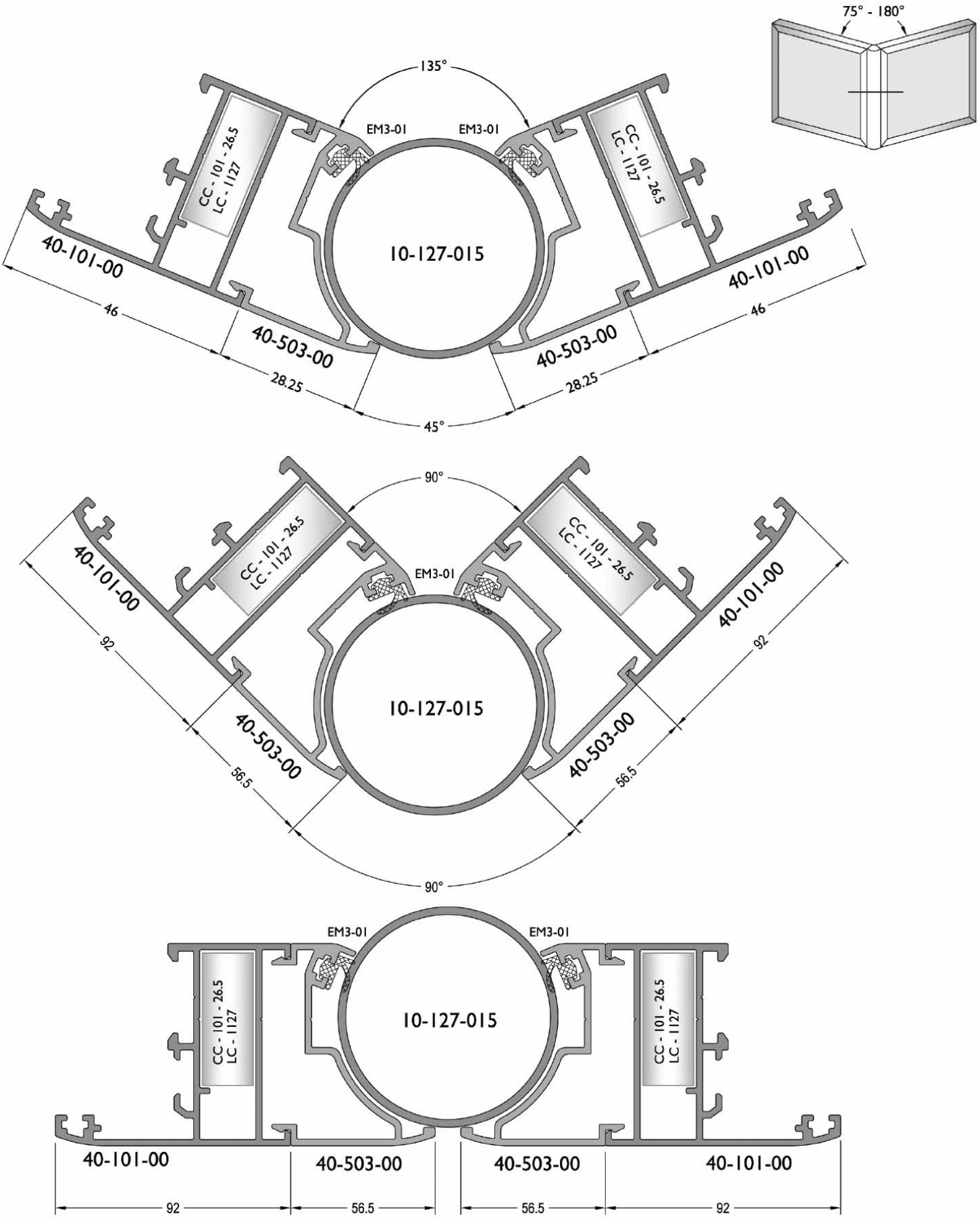
75° - 180°
135°
EM3-01
EM3-01
CC - 101 - 26.5
LC - 1127
CC - 101 - 26.5
LC - 1127
10-127-015
40-101-00
40-101-00
46
46
40-503-00
40-503-00
28.25
28.25
45°
90°
EM3-01
CC - 101 - 26.5
LC - 1127
CC - 101 - 26.5
LC - 1127
10-127-015
40-101-00
40-101-00
92
92
40-503-00
40-503-00
56.5
56.5
90°
EM3-01
EM3-01
CC - 101 - 26.5
LC - 1127
CC - 101 - 26.5
LC - 1127
10-127-015
40-101-00
40-503-00
40-503-00
40-101-00
92
56.5
56.5
92

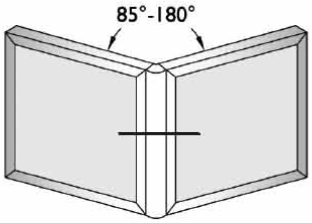
85°-180°

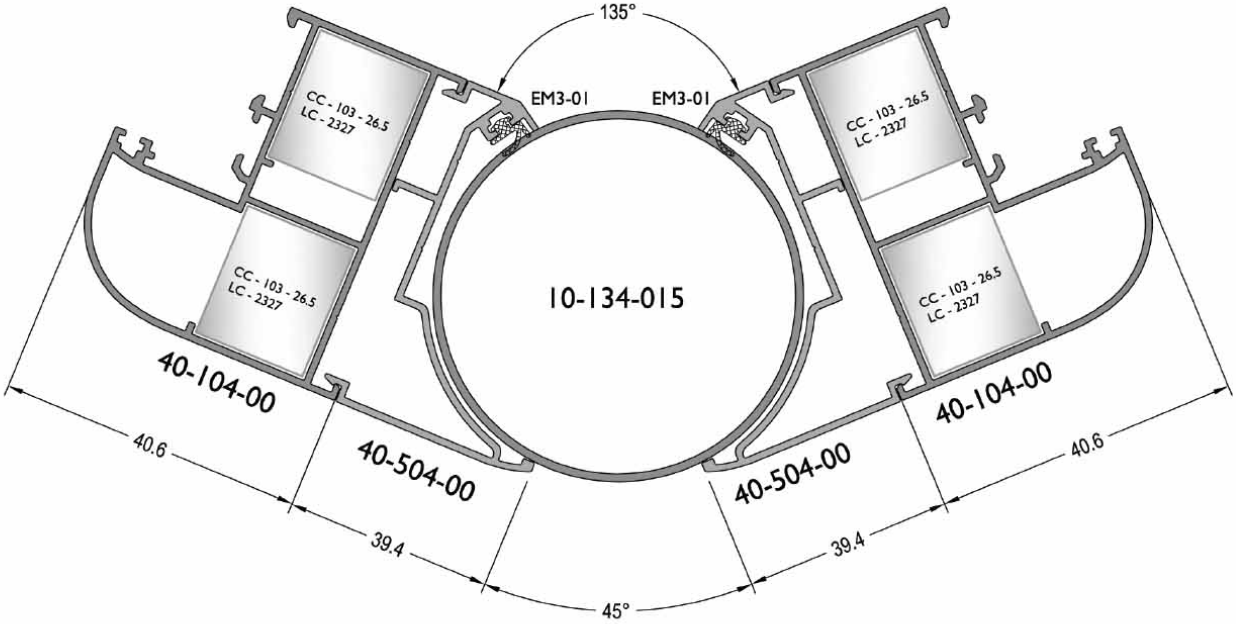
135°
EM3-01
EM3-01
CC - 103 - 26.5
LC - 2327
CC - 103 - 26.5
LC - 2327
CC - 103 - 26.5
LC - 2327
CC - 103 - 26.5
LC - 2327
10-134-015
40-104-00
40-104-00
40-504-00
40-504-00
40.6
40.6
39.4
39.4
45°

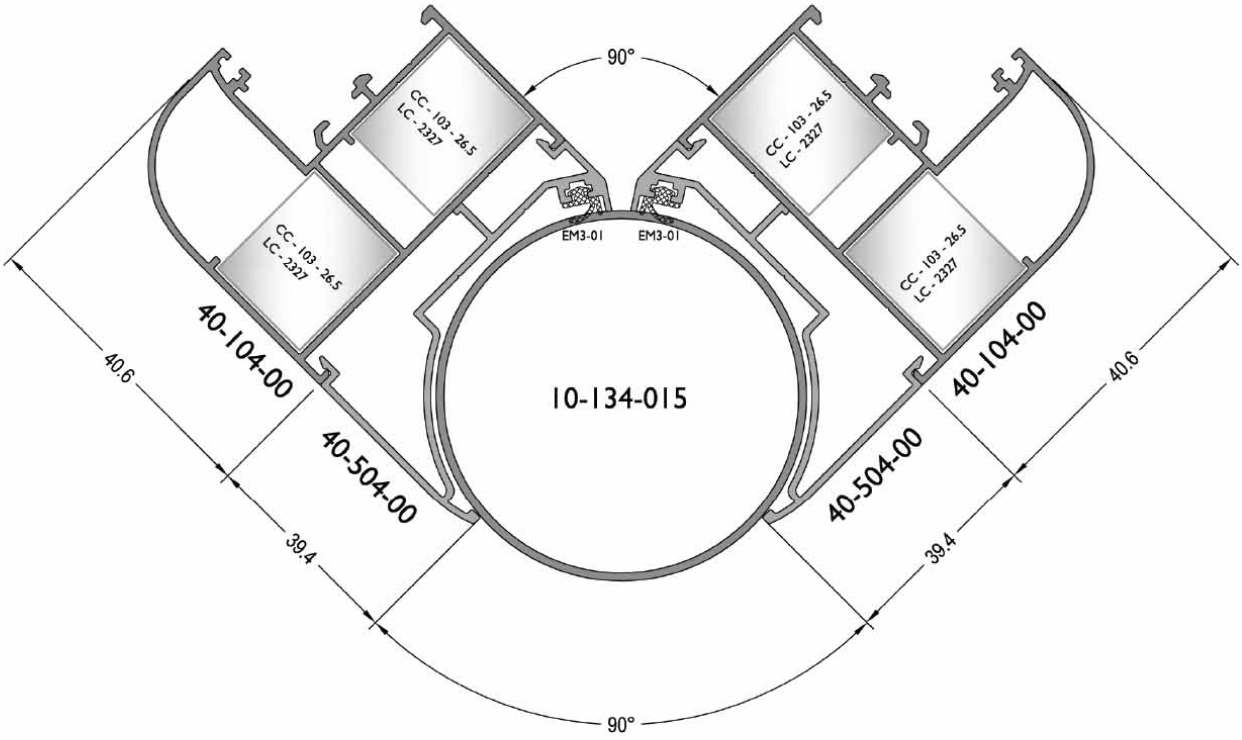
90°
EM3-01
EM3-01
CC - 103 - 26.5
LC - 2327
CC - 103 - 26.5
LC - 2327
CC - 103 - 26.5
LC - 2327
CC - 103 - 26.5
LC - 2327
10-134-015
40-104-00
40-104-00
40-504-00
40-504-00
40.6
40.6
39.4
39.4
90°

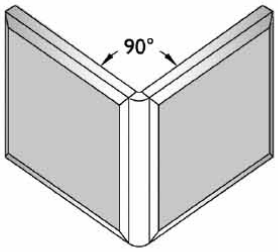
90°

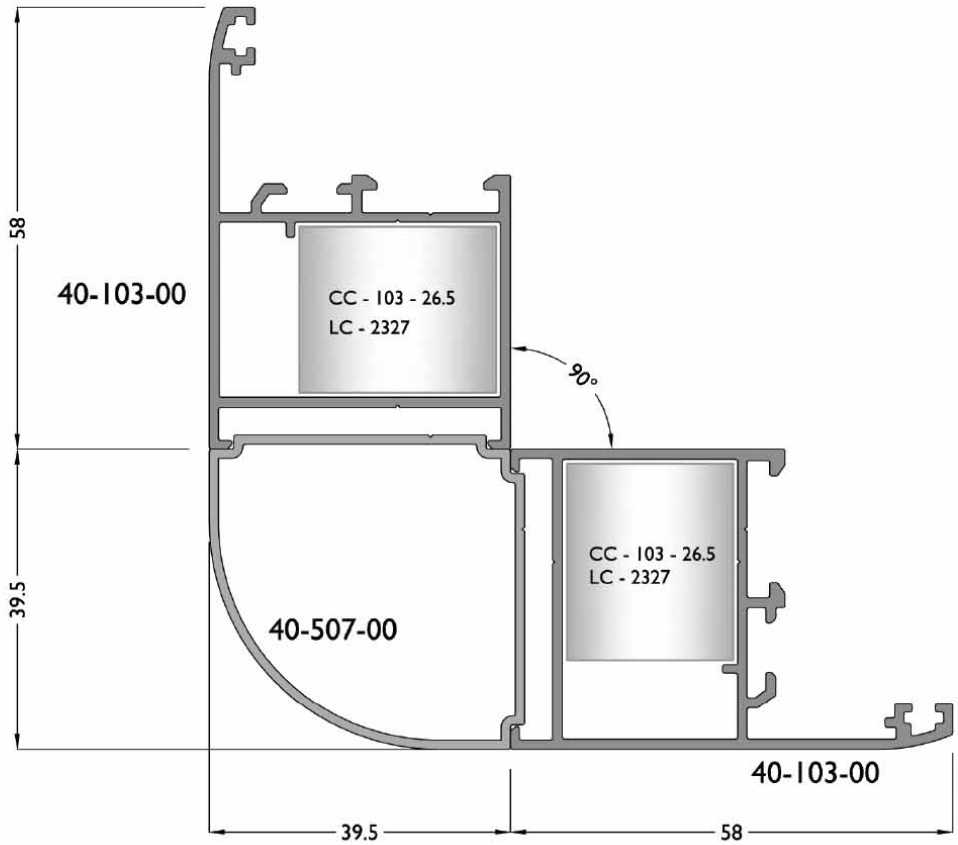
58
40-103-00
CC - 103 - 26.5
LC - 2327
90°
39.5
40-507-00
CC - 103 - 26.5
LC - 2327
40-103-00
39.5
58

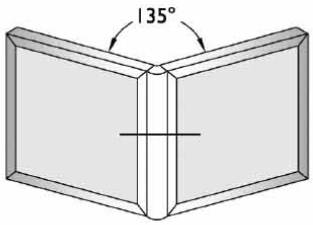
135°

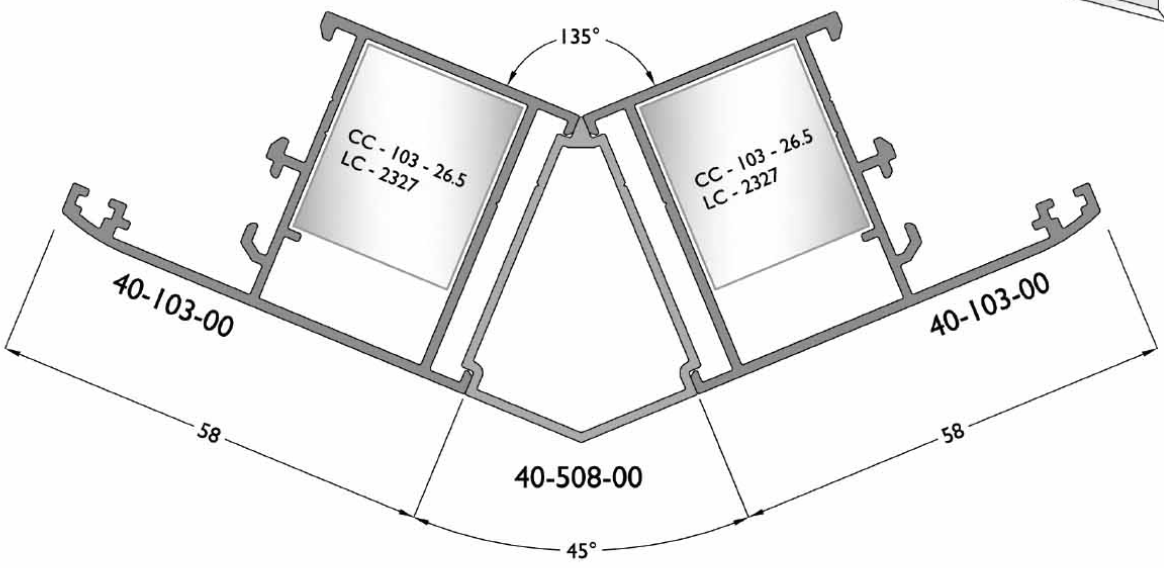
135°
CC - 103 - 26.5
LC - 2327
CC - 103 - 26.5
LC - 2327
40-103-00
40-103-00
58
58
40-508-00
45°

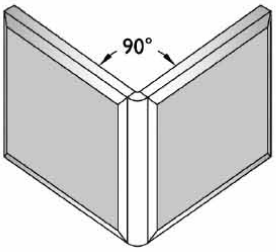
90°

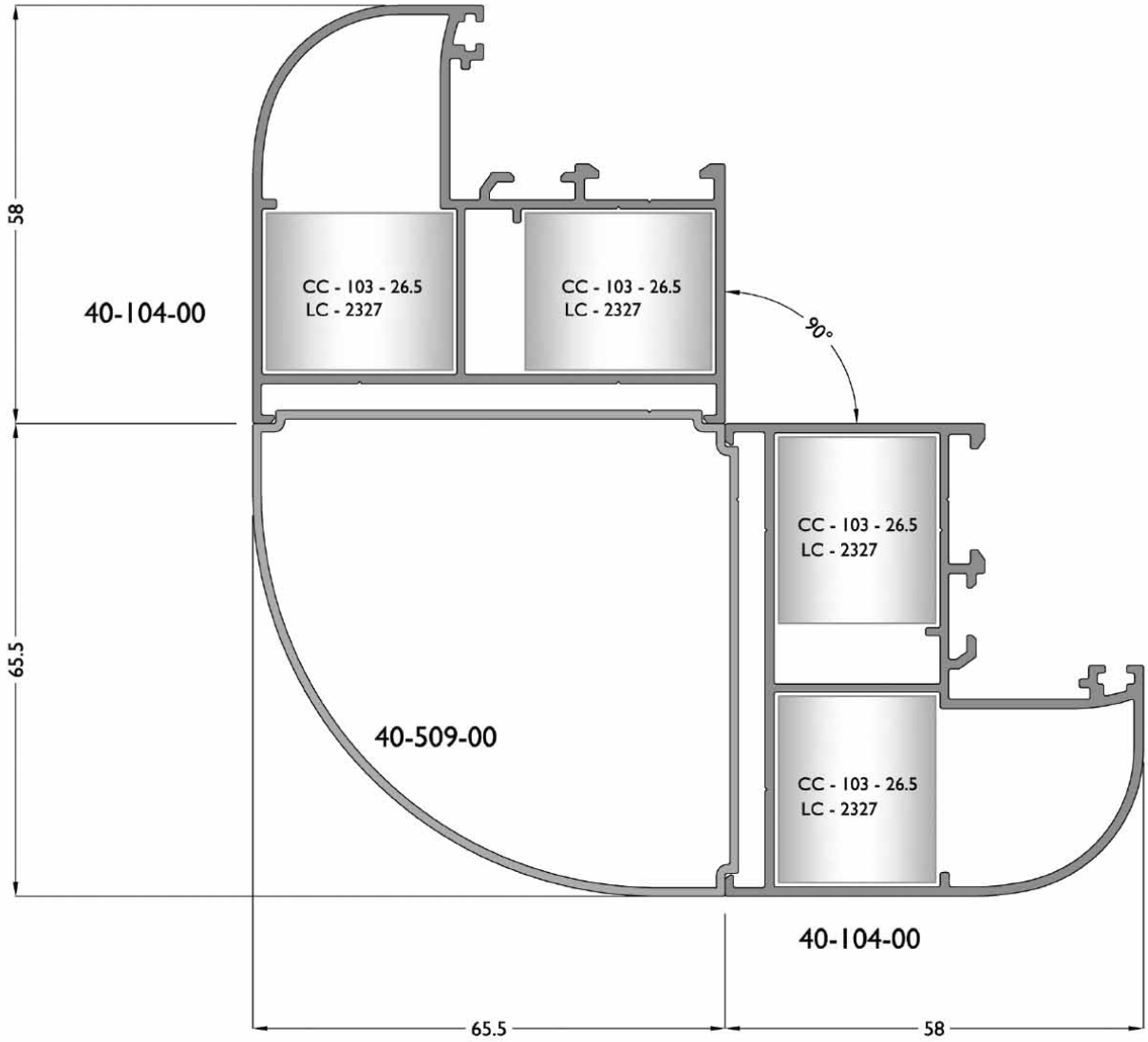
58
40-104-00
CC - 103 - 26.5
LC - 2327
CC - 103 - 26.5
LC - 2327
90°
CC - 103 - 26.5
LC - 2327
65.5
40-509-00
CC - 103 - 26.5
LC - 2327
40-104-00
65.5
58

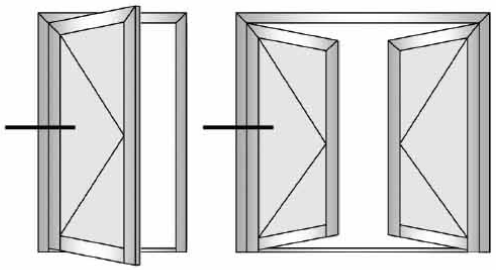

## Inside Opening Door

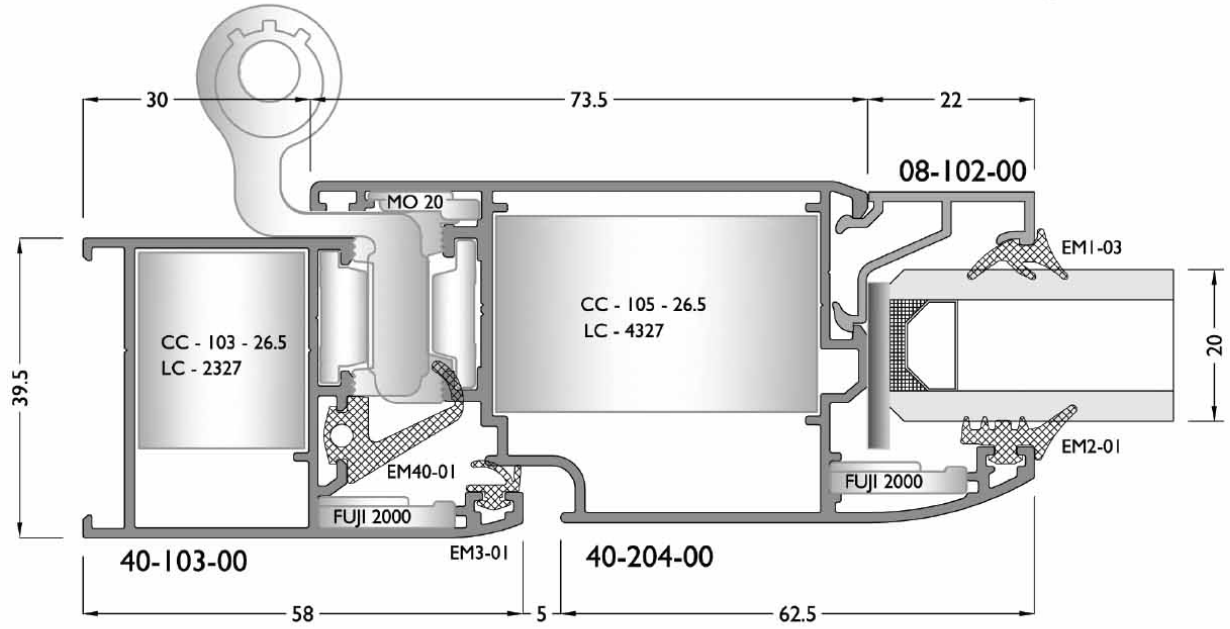


## Outside Opening Door

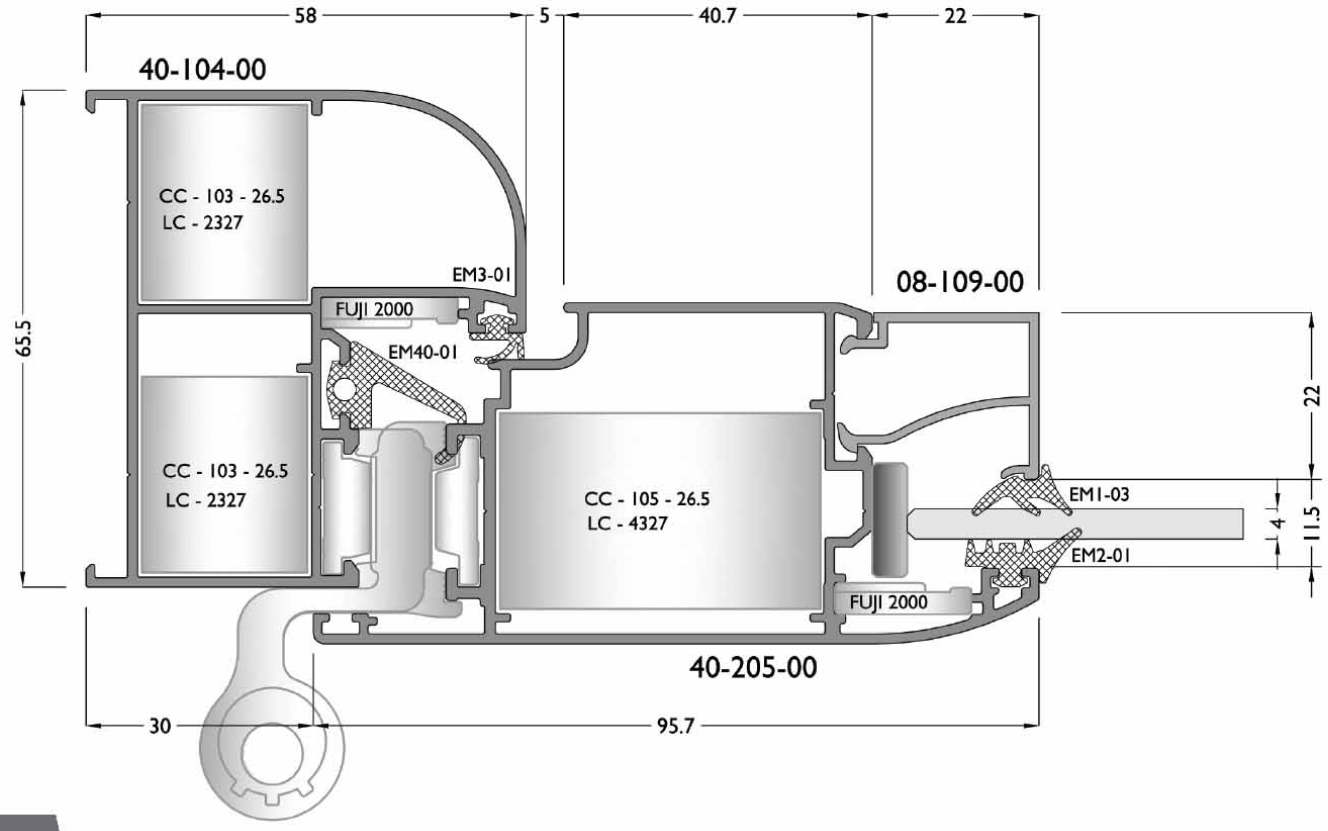

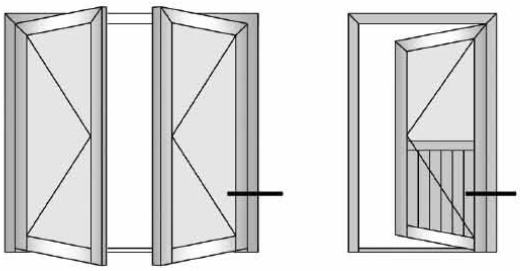

## Inside Opening Door

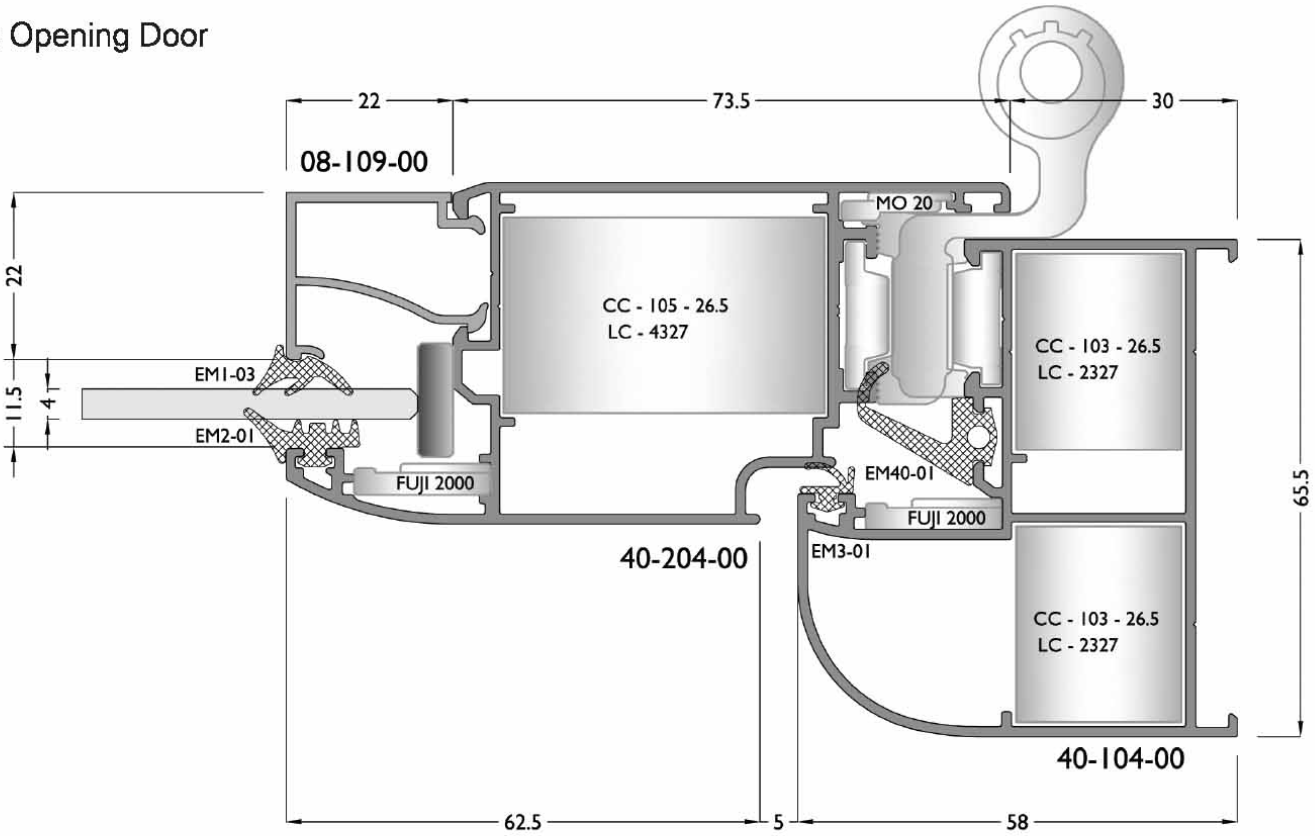


## Outside Opening Door

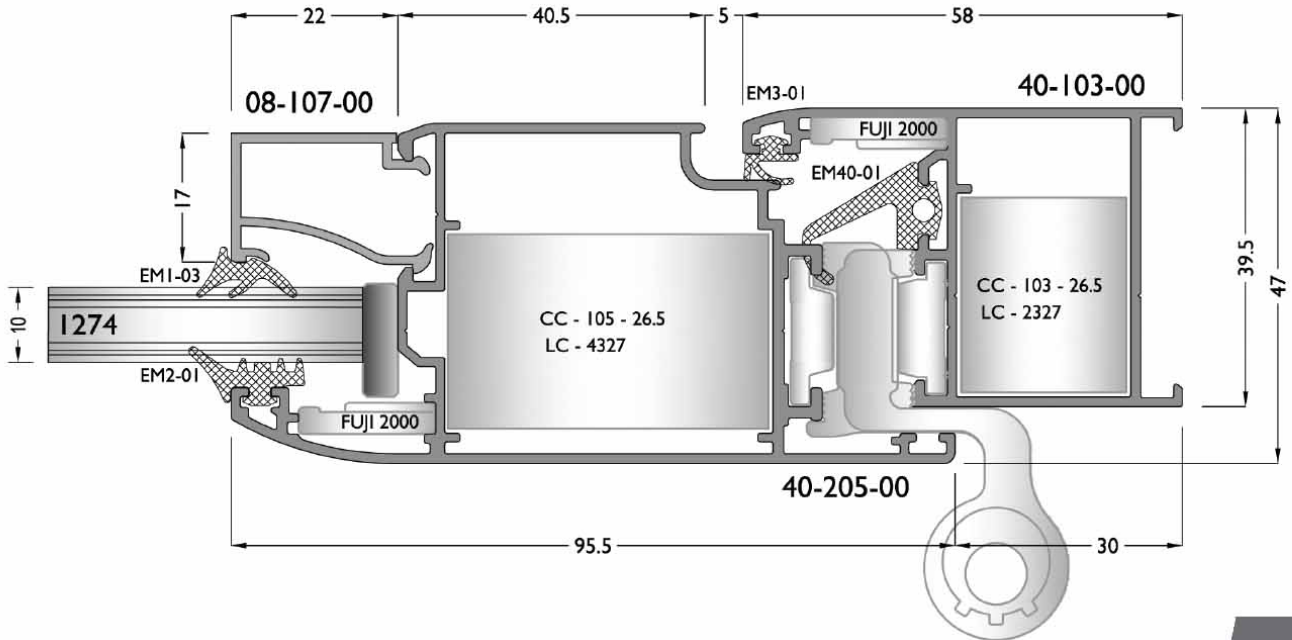

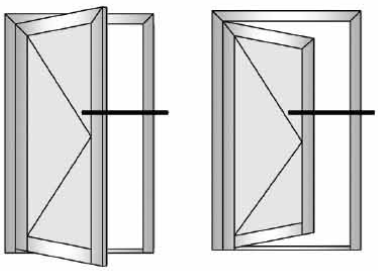

## Inside Opening Door

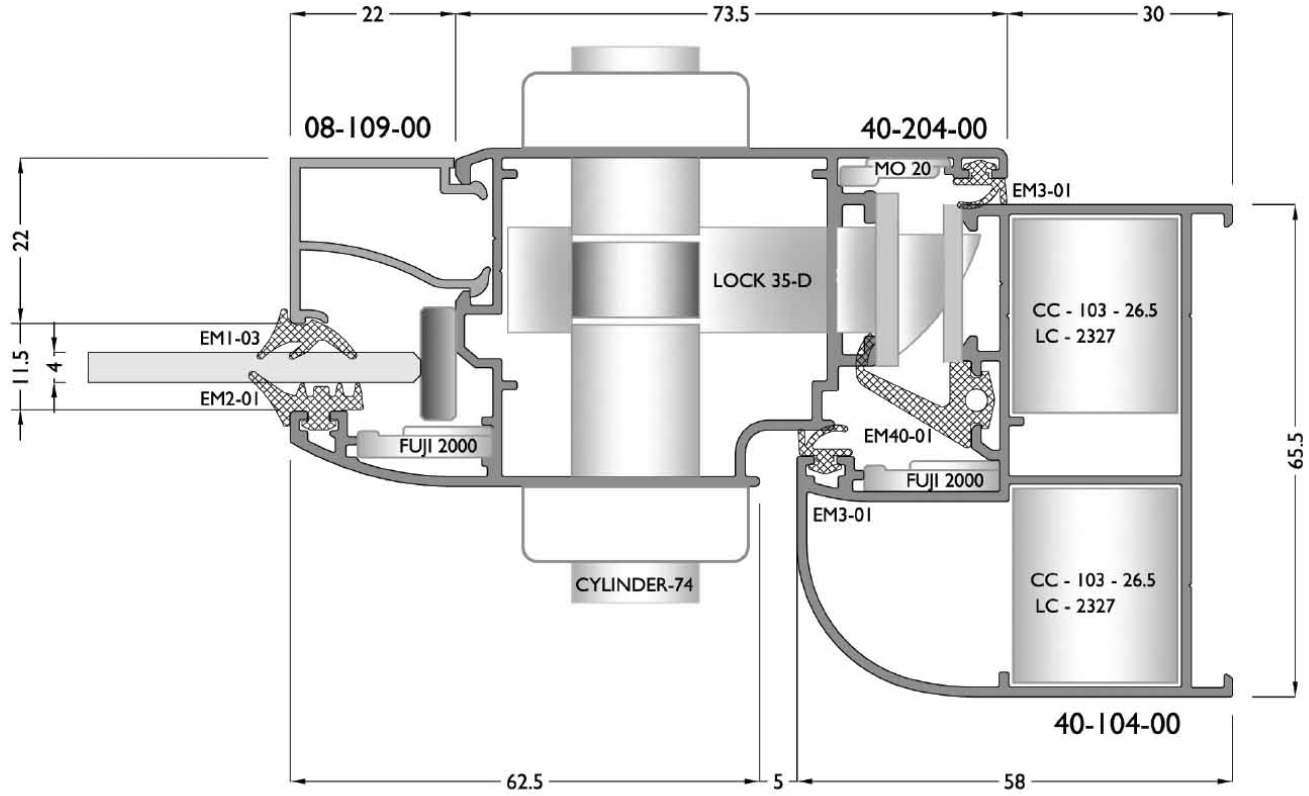


## Outside Opening Door

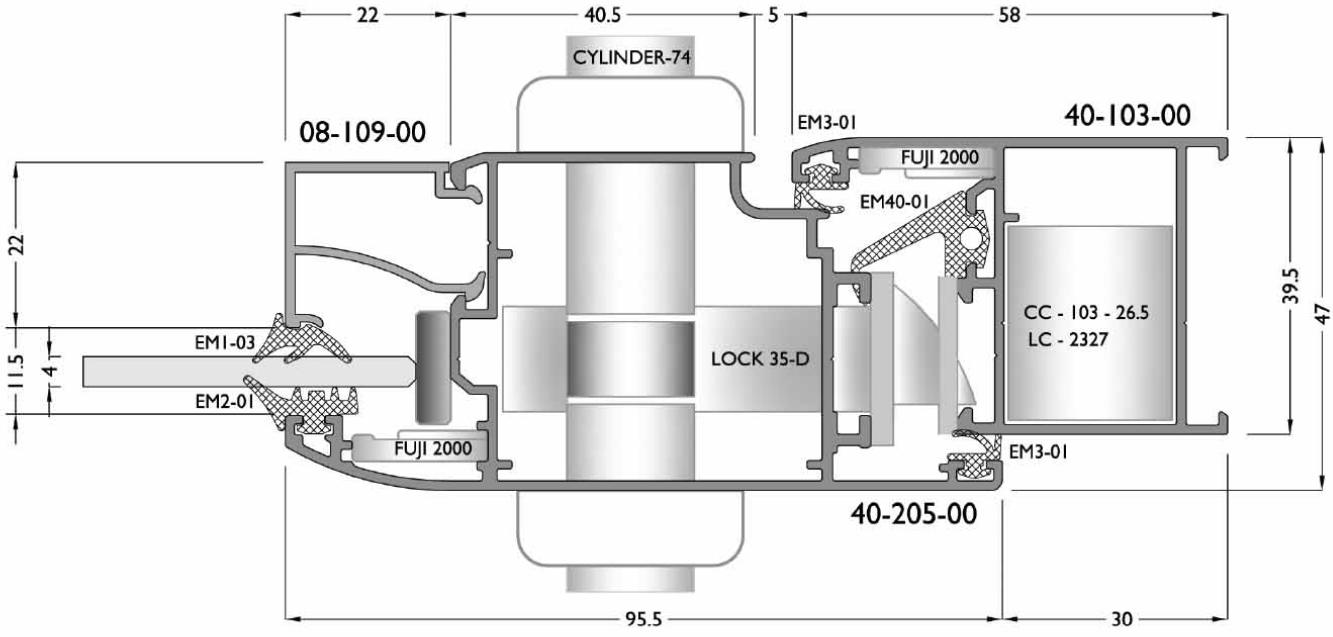

## Inside Opening Door

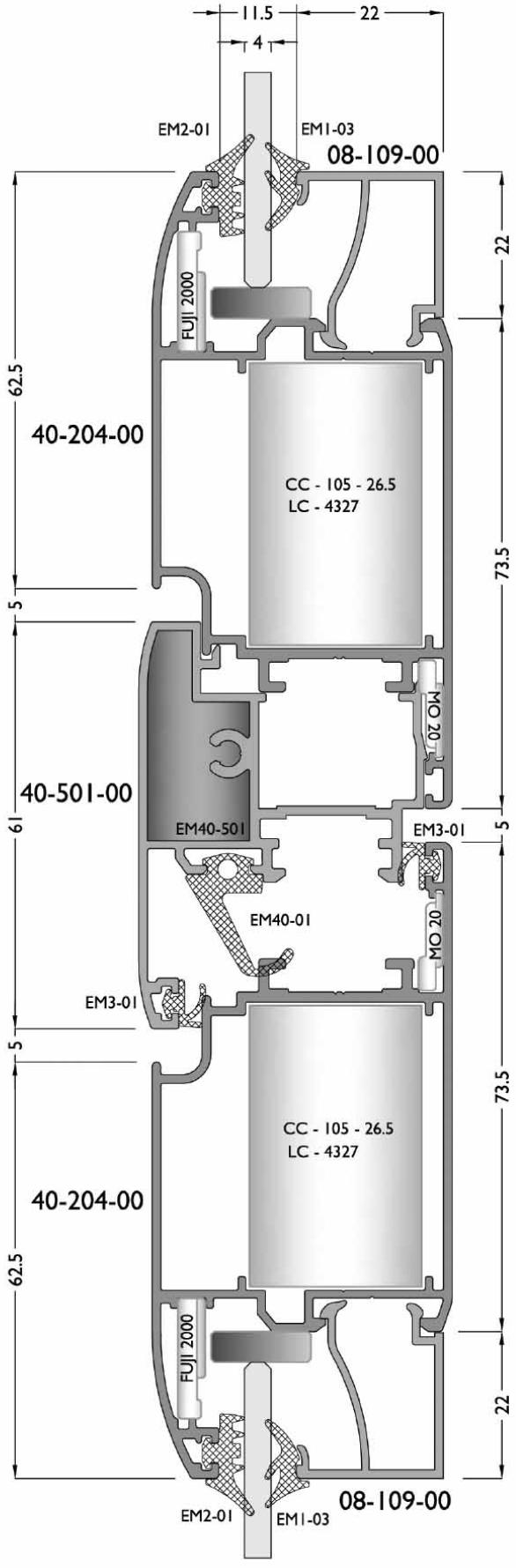


## Outside Opening Door

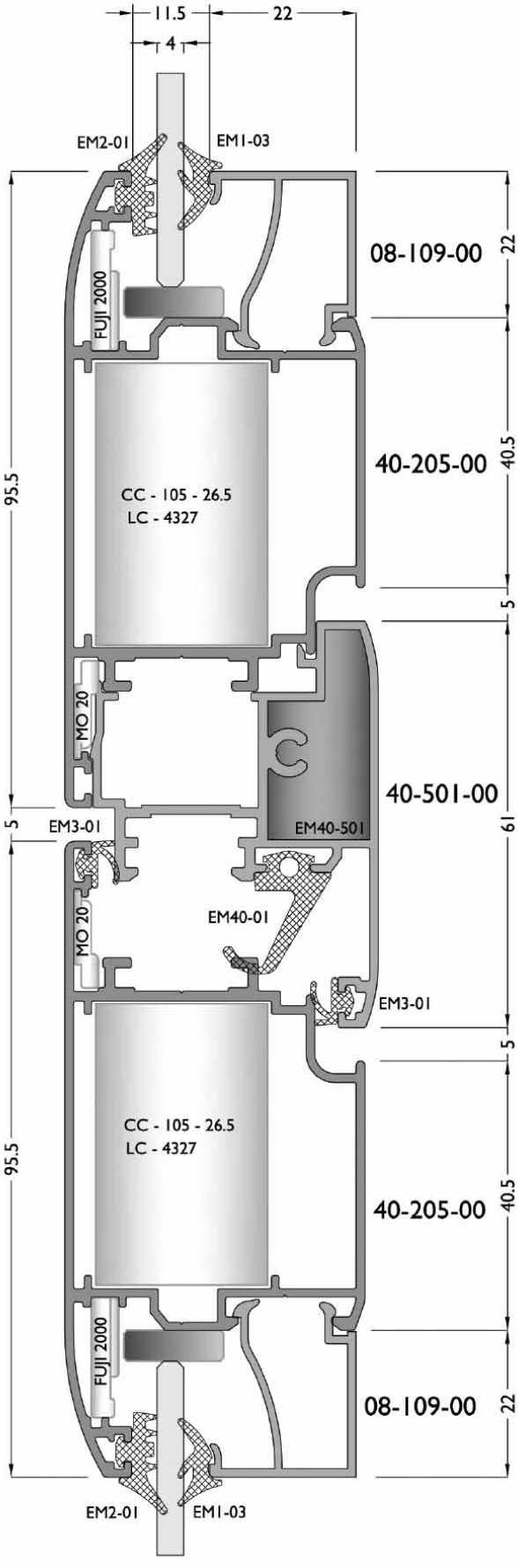


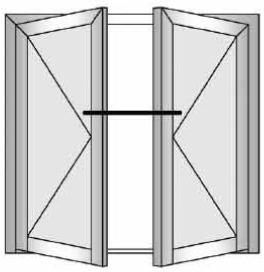

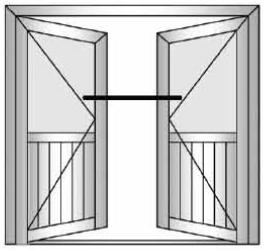

## Outside Opening Door

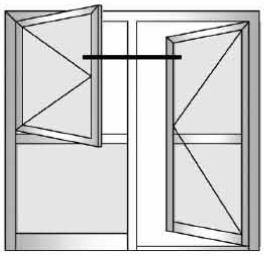

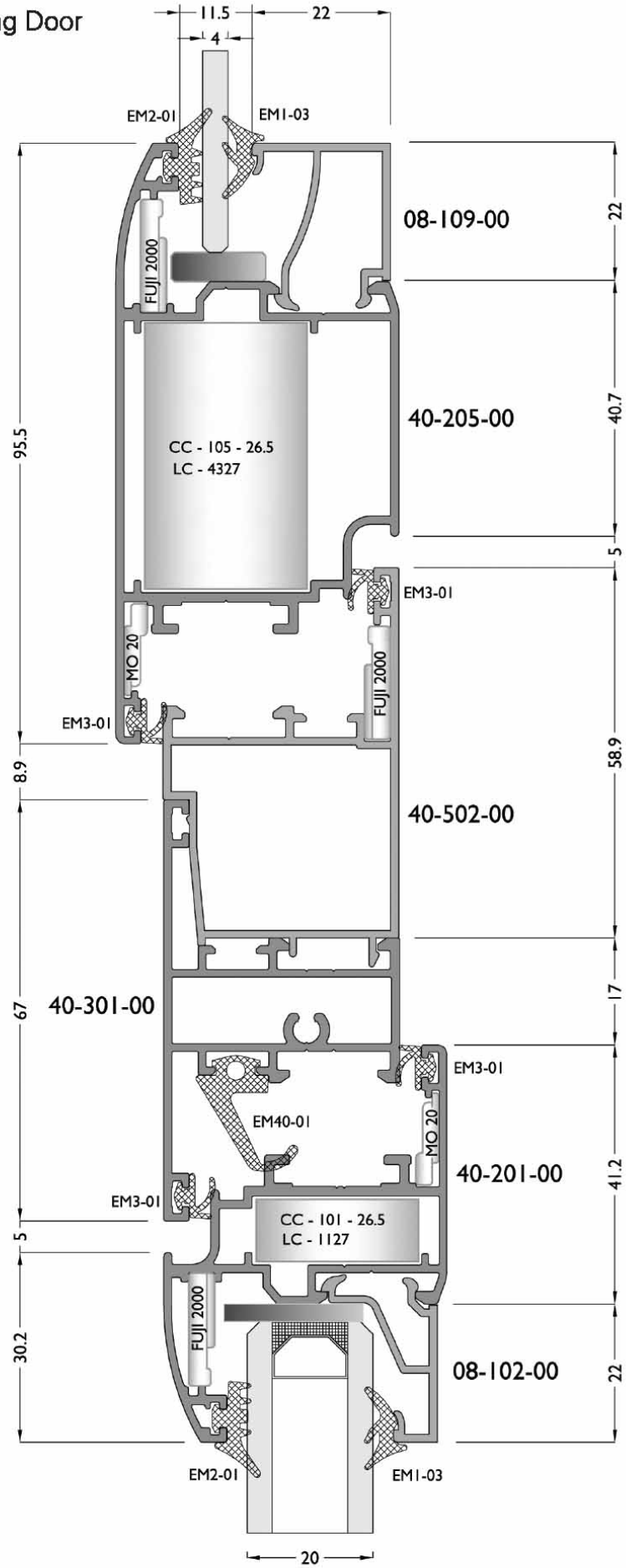

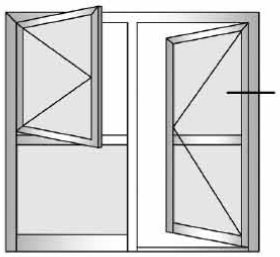

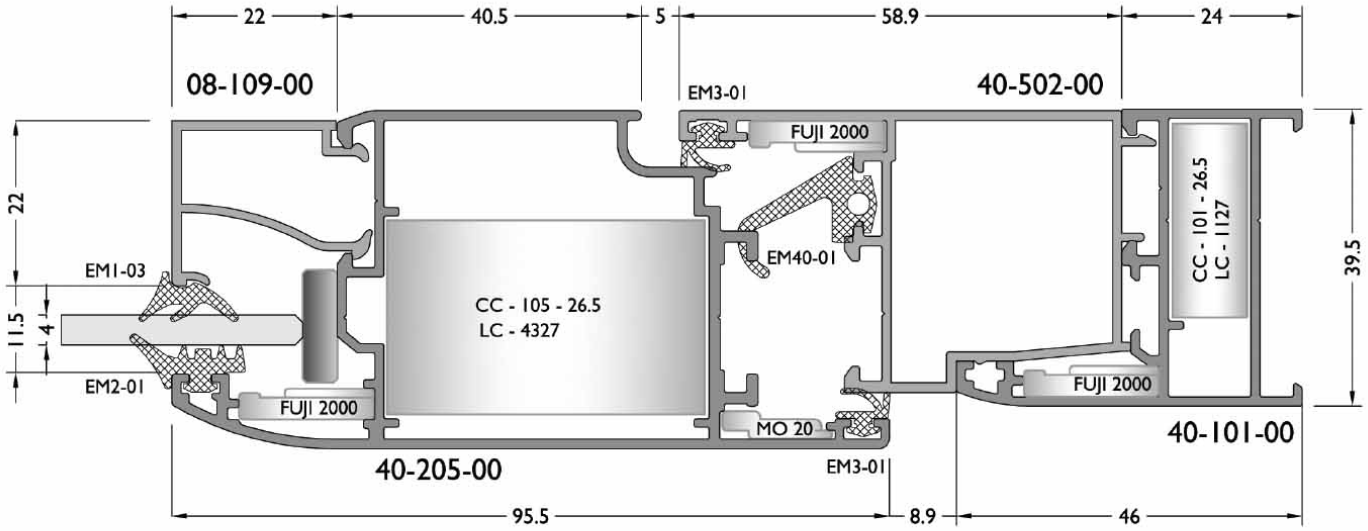
22
40.5
5
58.9
24
08-109-00
EM3-01
40-502-00
FUJI 2000
22
EM1-03
11.5
4
EM2-01
CC - 105 - 26.5
LC - 4327
EM40-01
CC - 101 - 26.5
LC - 1127
39.5
FUJI 2000
FUJI 2000
MO 20
40-101-00
40-205-00
EM3-01
95.5
8.9
46

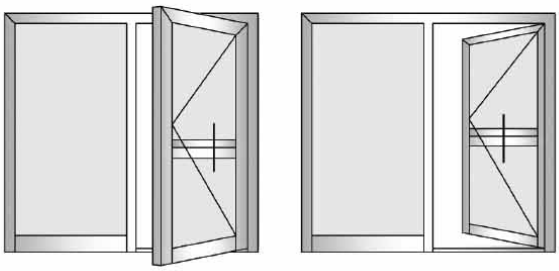

Inside Opening Door

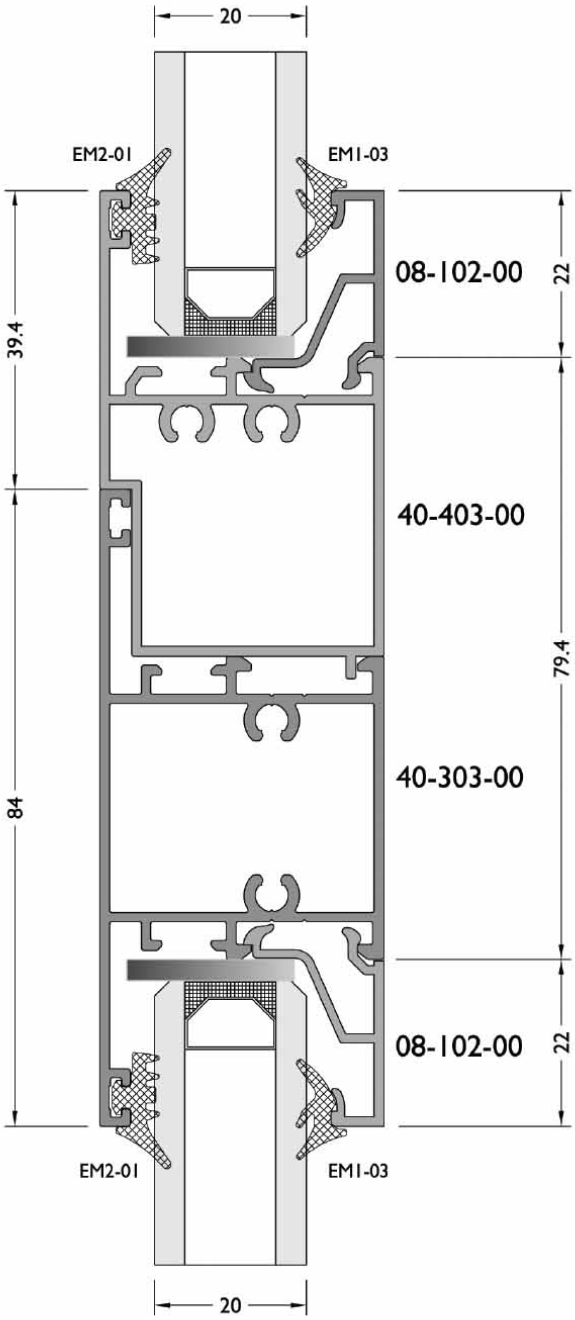


Outside Opening Door

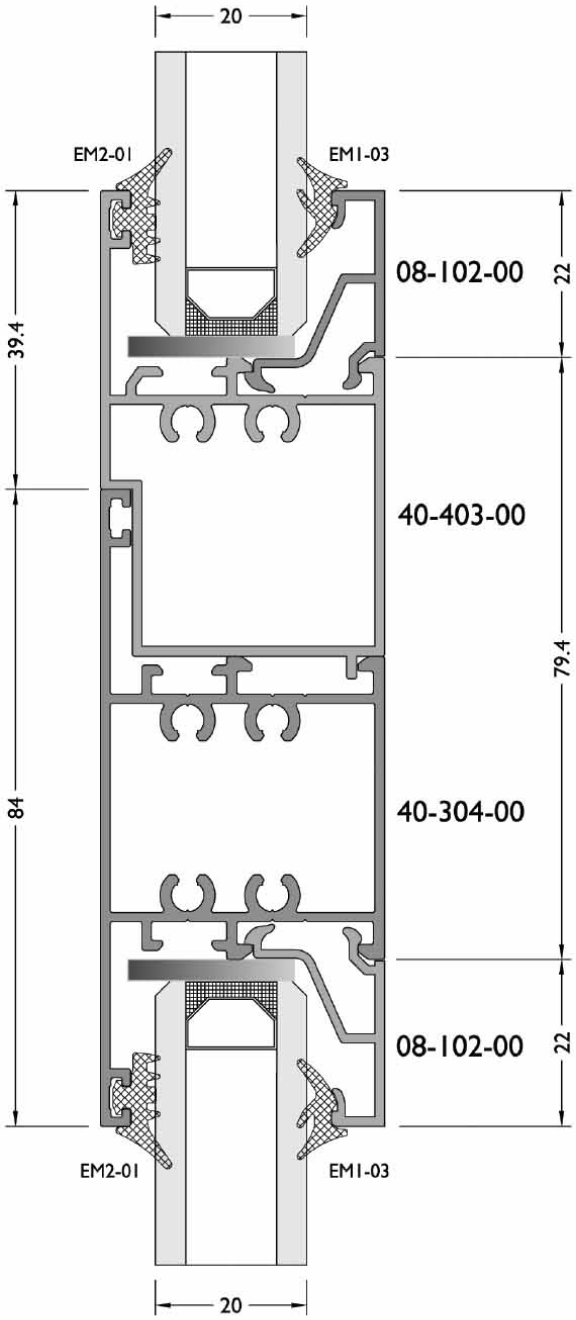

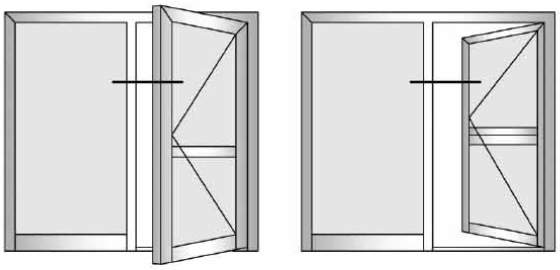

## Inside Opening Door

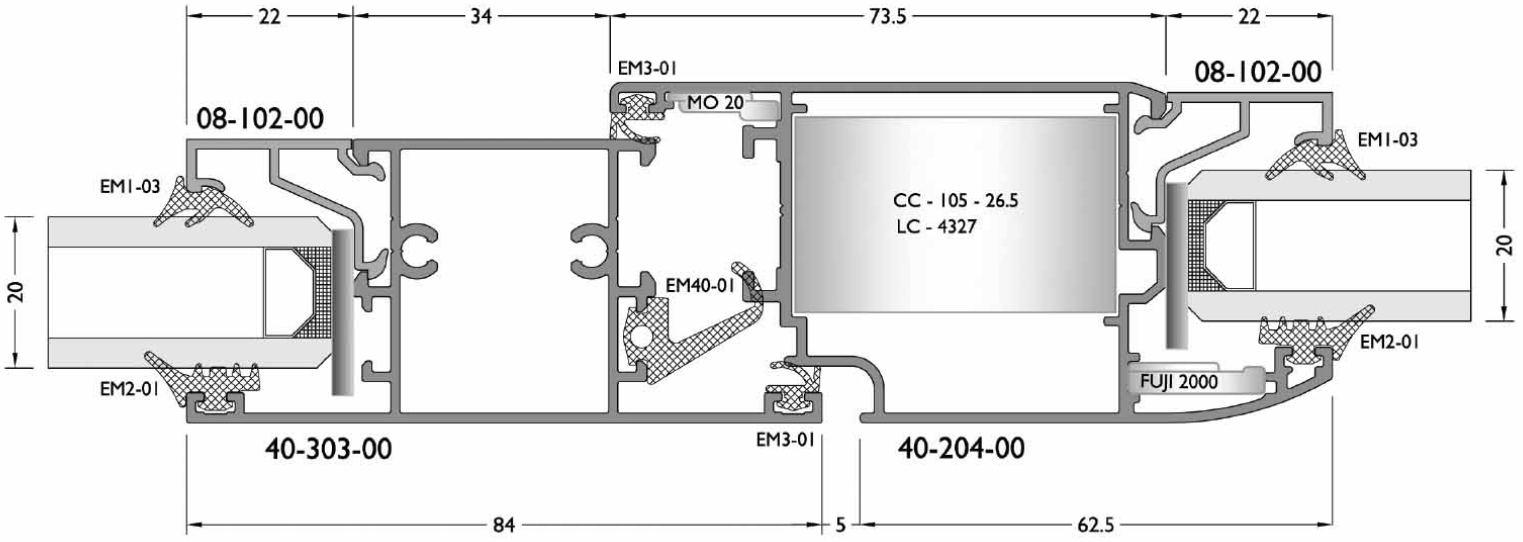


## Outside Opening Door

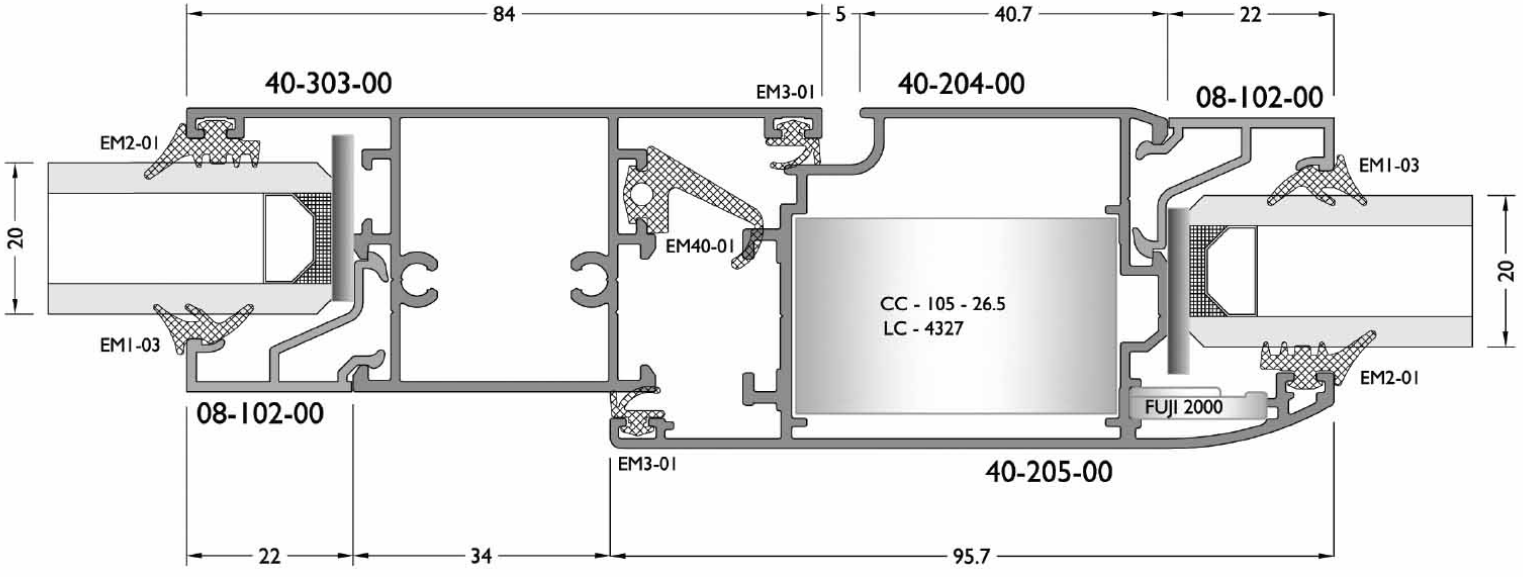

## Outside Opening Door

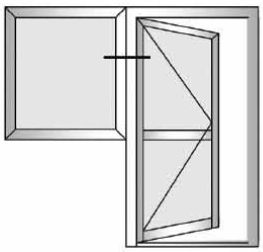

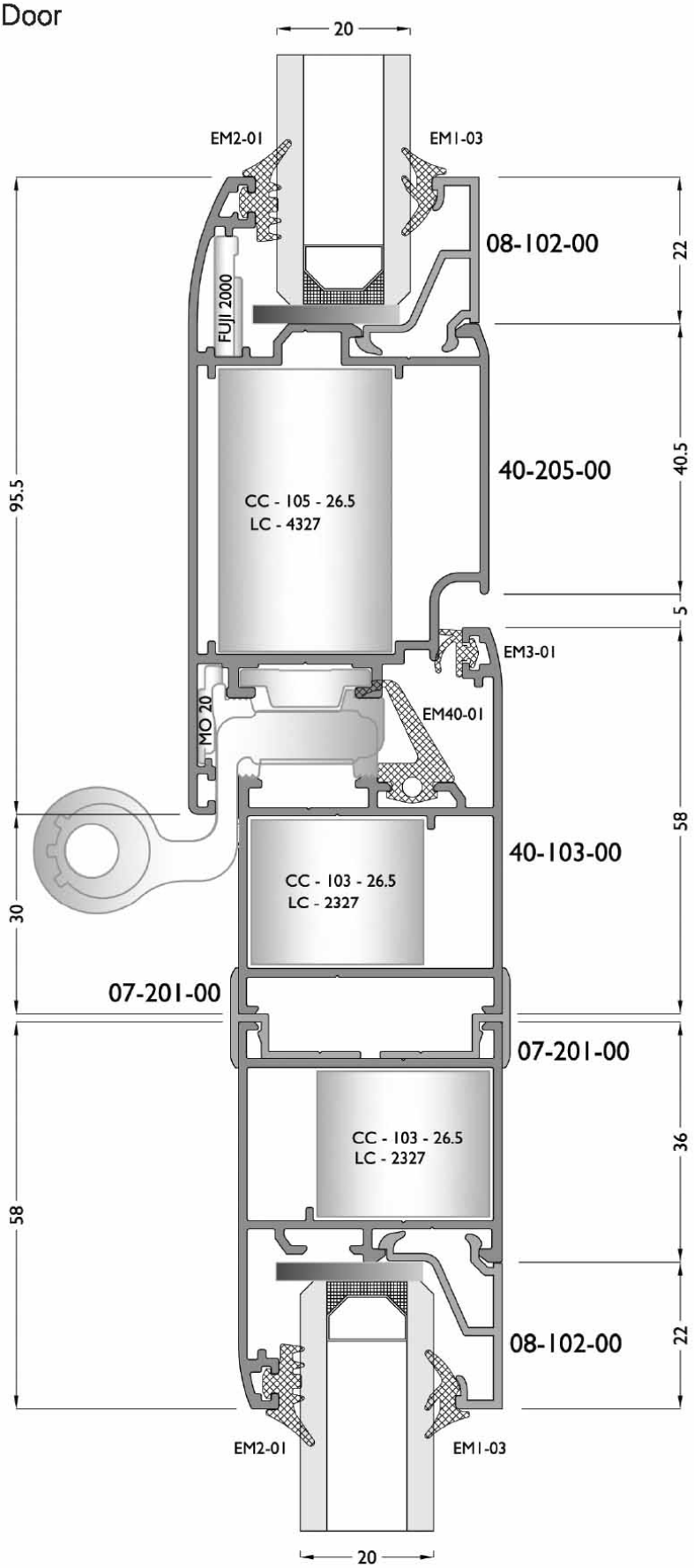

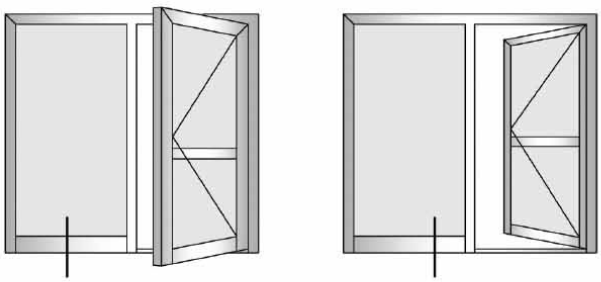

Inside Opening Door

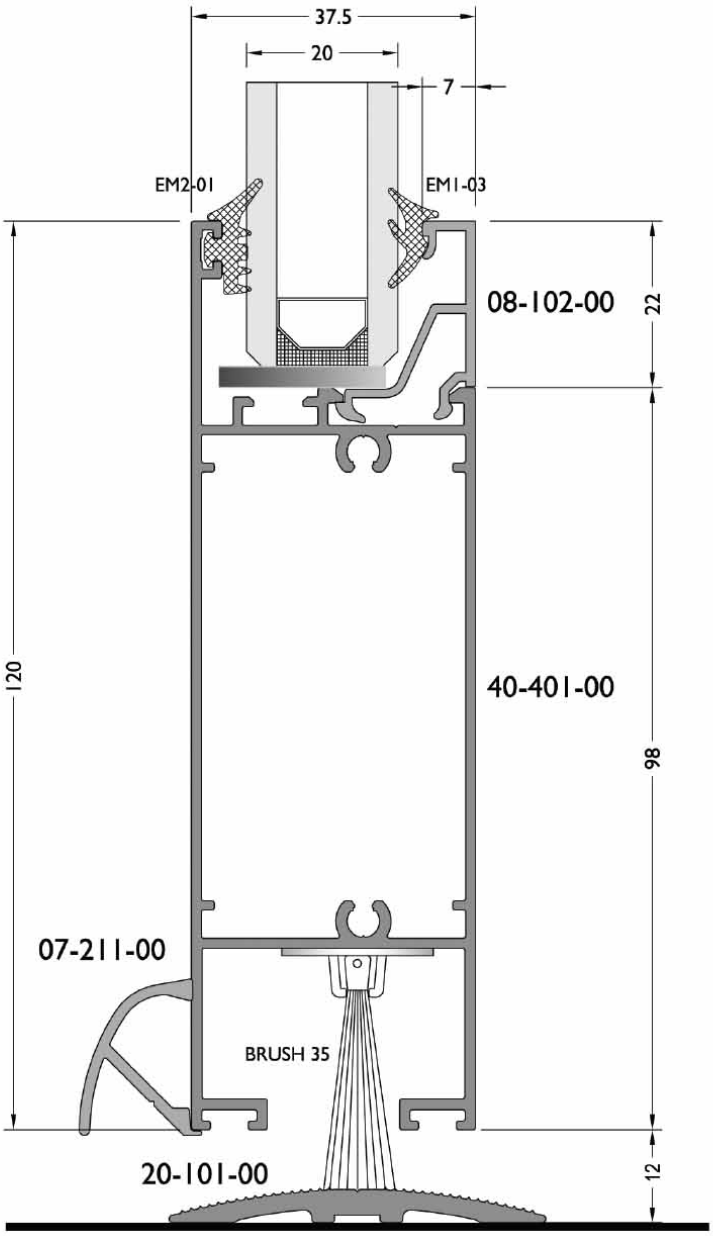


Outside Opening Door

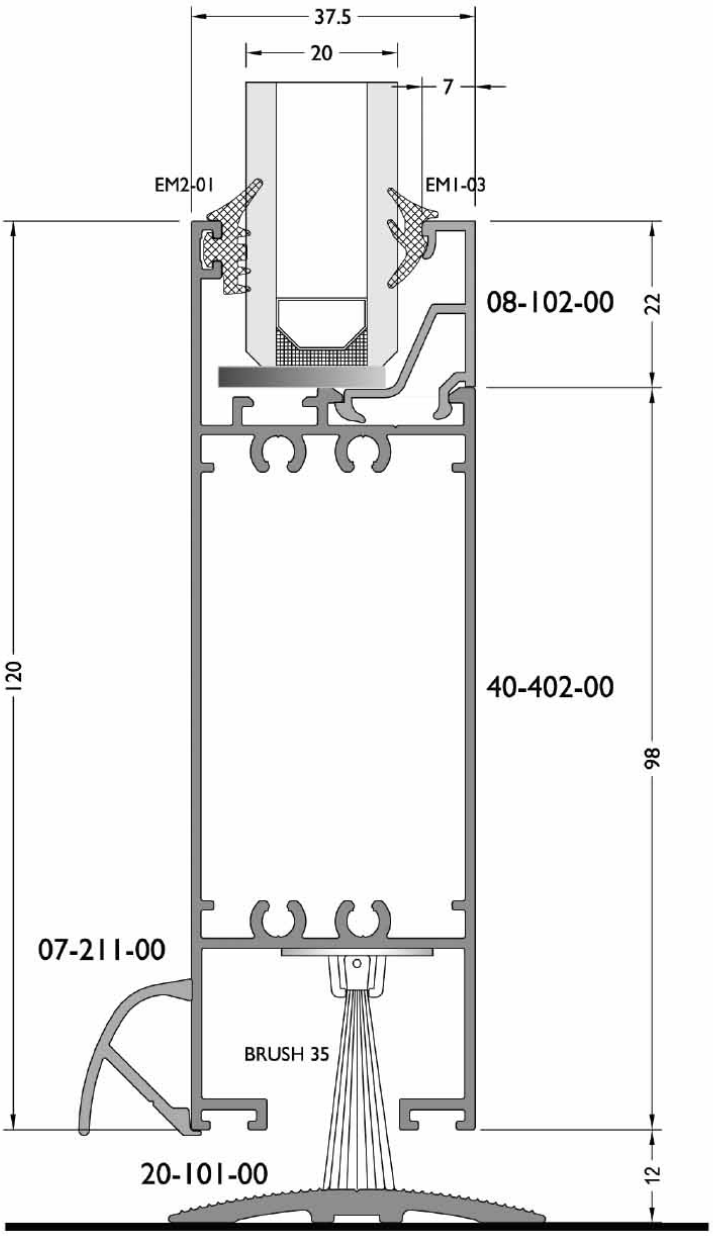

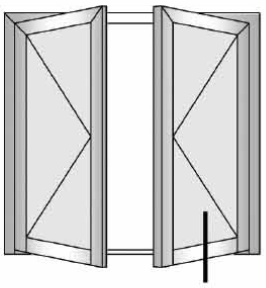

## Outside Opening Door

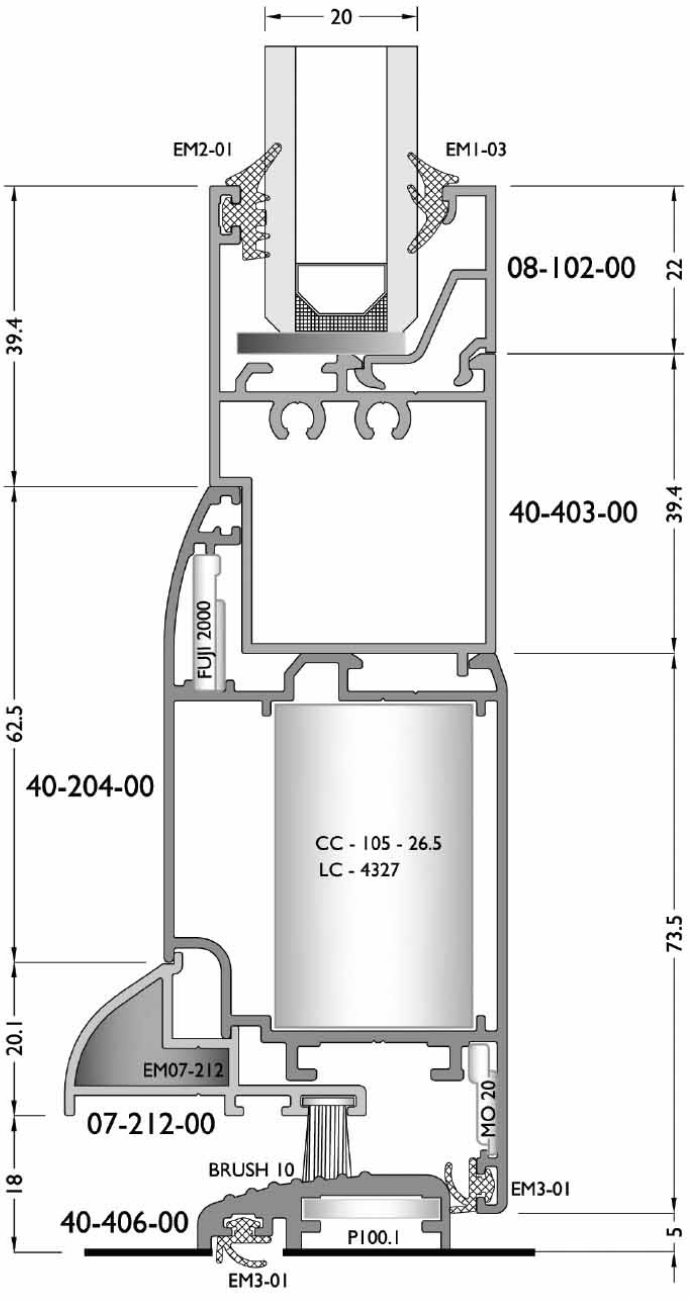


## Inside Opening Door

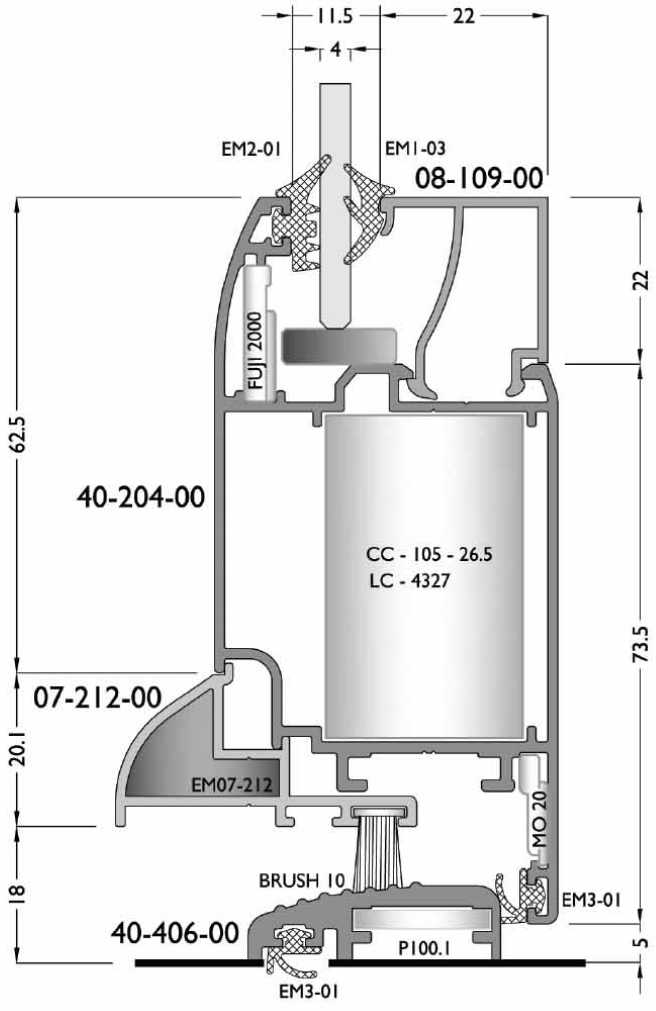

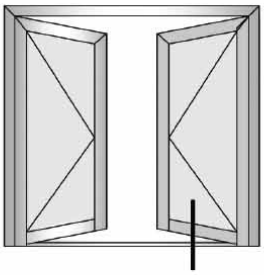

## Outside Opening Door

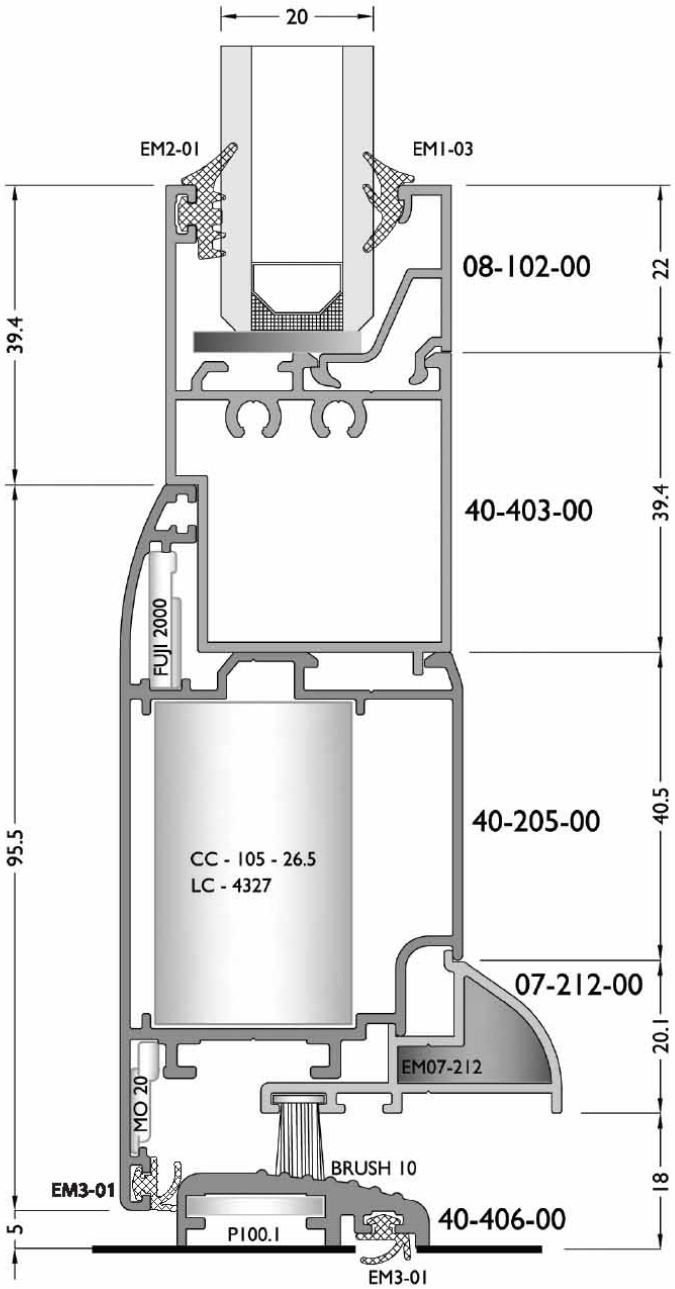


## Inside Opening Door

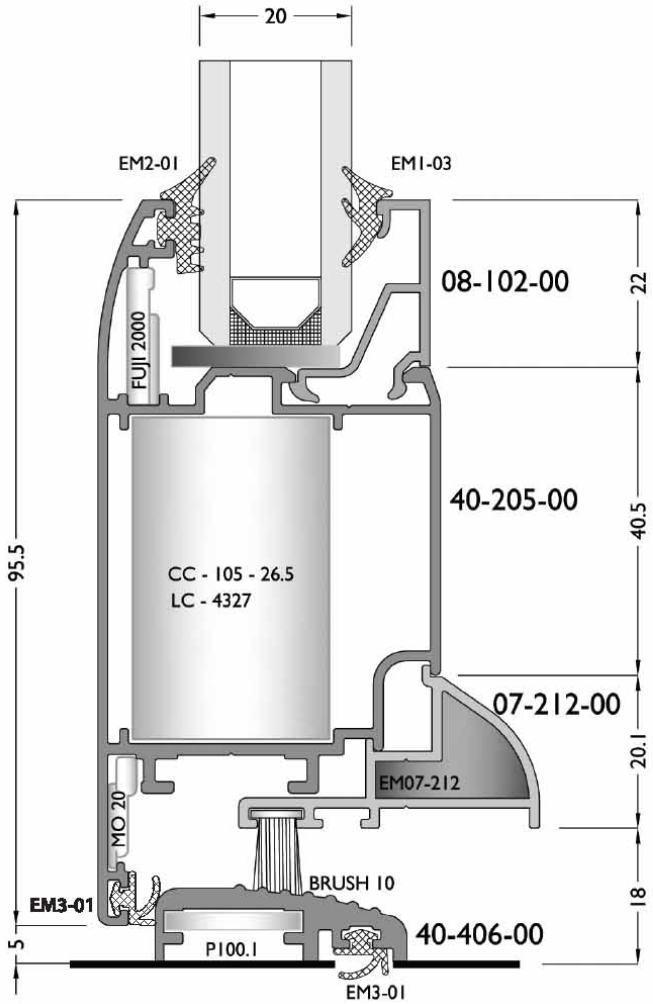

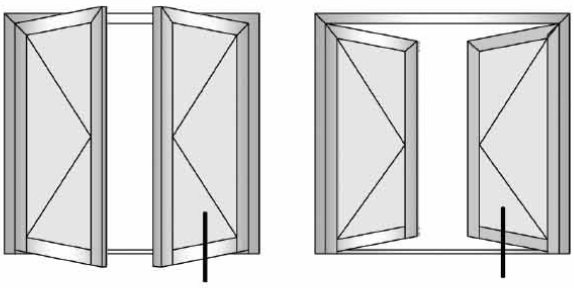

Inside Opening Door

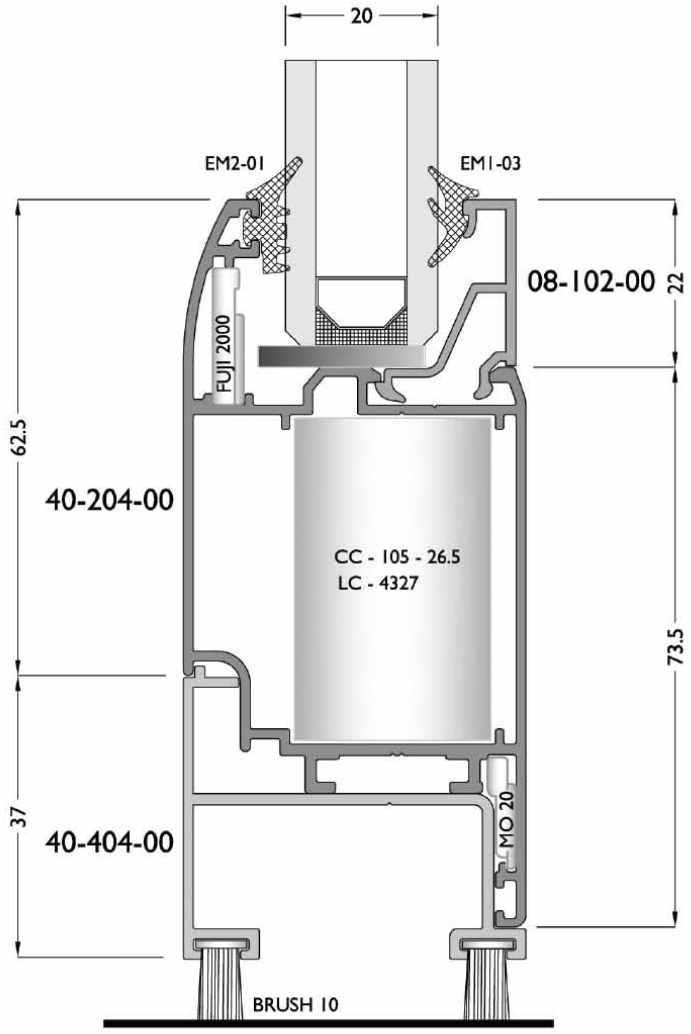


Outside Opening Door

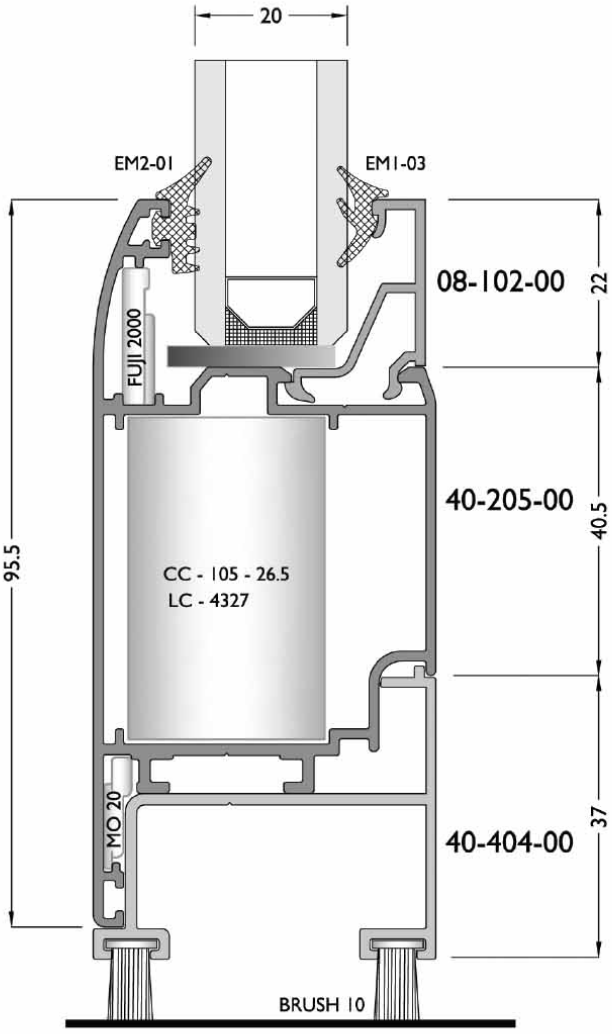

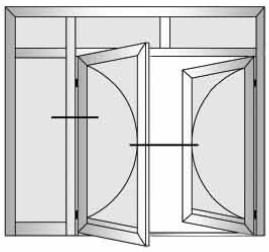

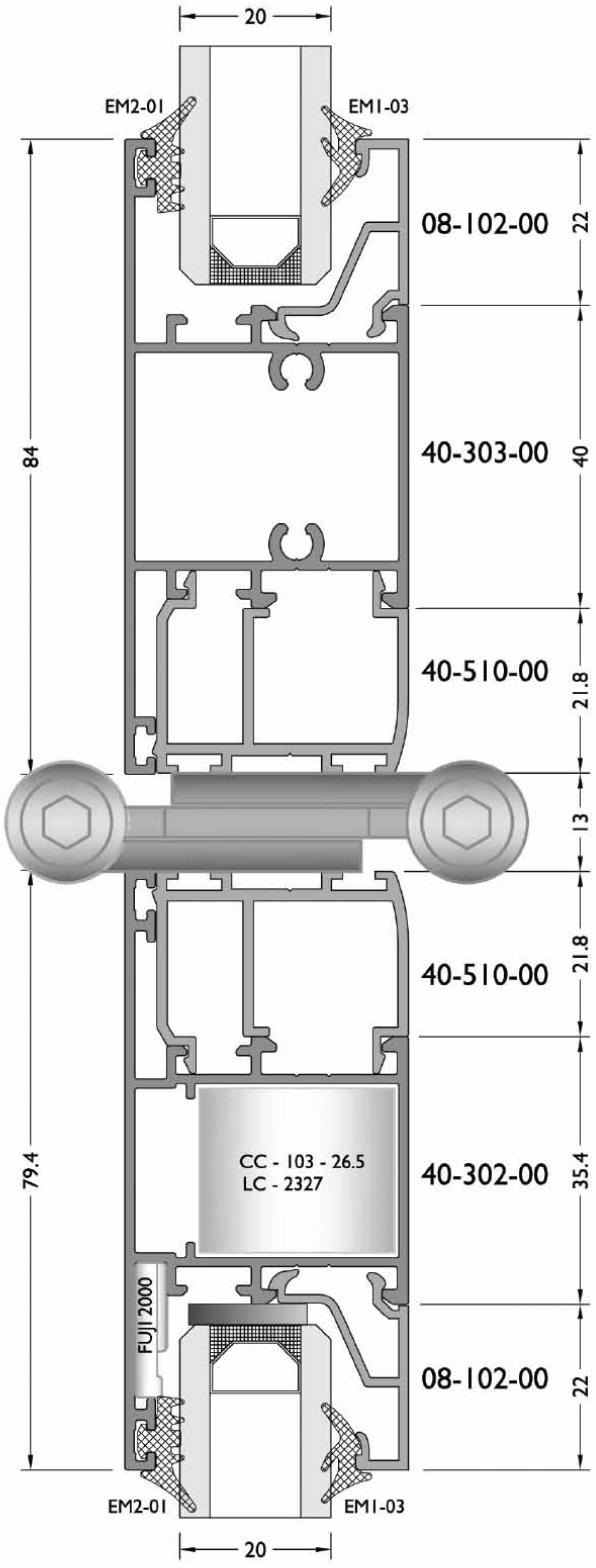
20
EM2-01
EM1-03
08-102-00
22
40-303-00
40
40-510-00
21.8
13
84
79.4
40-510-00
21.8
CC - 103 - 26.5
LC - 2327
40-302-00
35.4
FUJI 2000
08-102-00
22
EM2-01
EM1-03
20

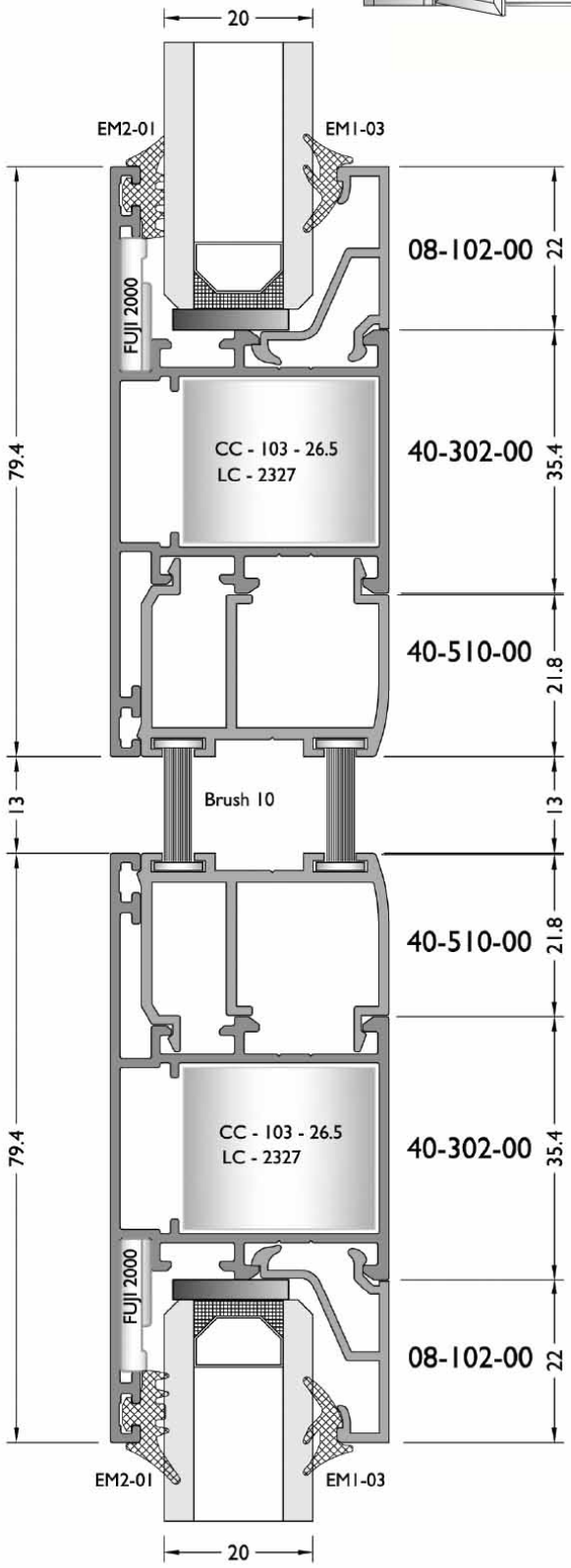
20
EM2-01
EM1-03
08-102-00
22
FUJI 2000
CC - 103 - 26.5
LC - 2327
40-302-00
35.4
79.4
40-510-00
21.8
13
Brush 10
13
40-510-00
21.8
CC - 103 - 26.5
LC - 2327
40-302-00
35.4
79.4
FUJI 2000
08-102-00
22
EM2-01
EM1-03
20

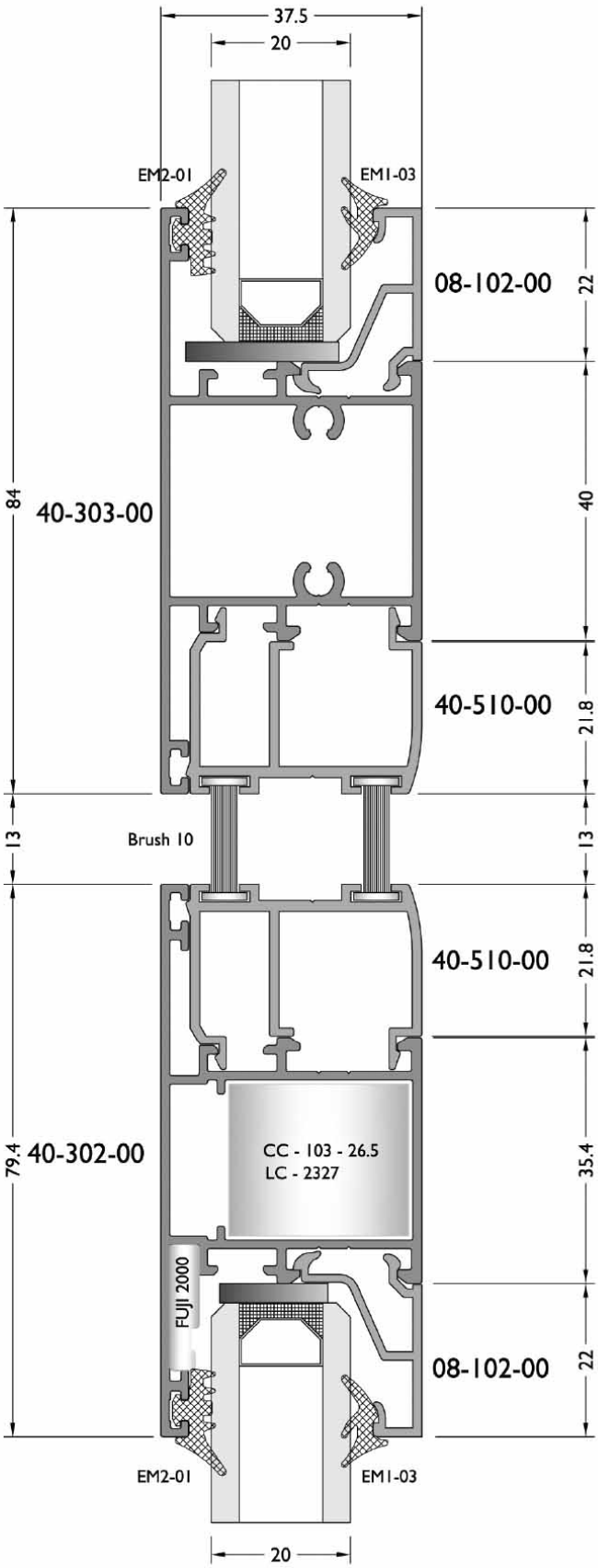
37.5
20
EM2-01
EM1-03
08-102-00
22
84
40-303-00
40
40-510-00
21.8
13
Brush 10
13
40-510-00
21.8
79.4
40-302-00
CC - 103 - 26.5
LC - 2327
35.4
FUJI 2000
08-102-00
22
EM2-01
EM1-03
20

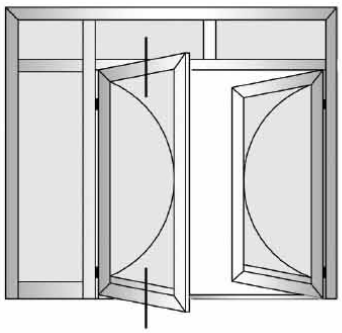

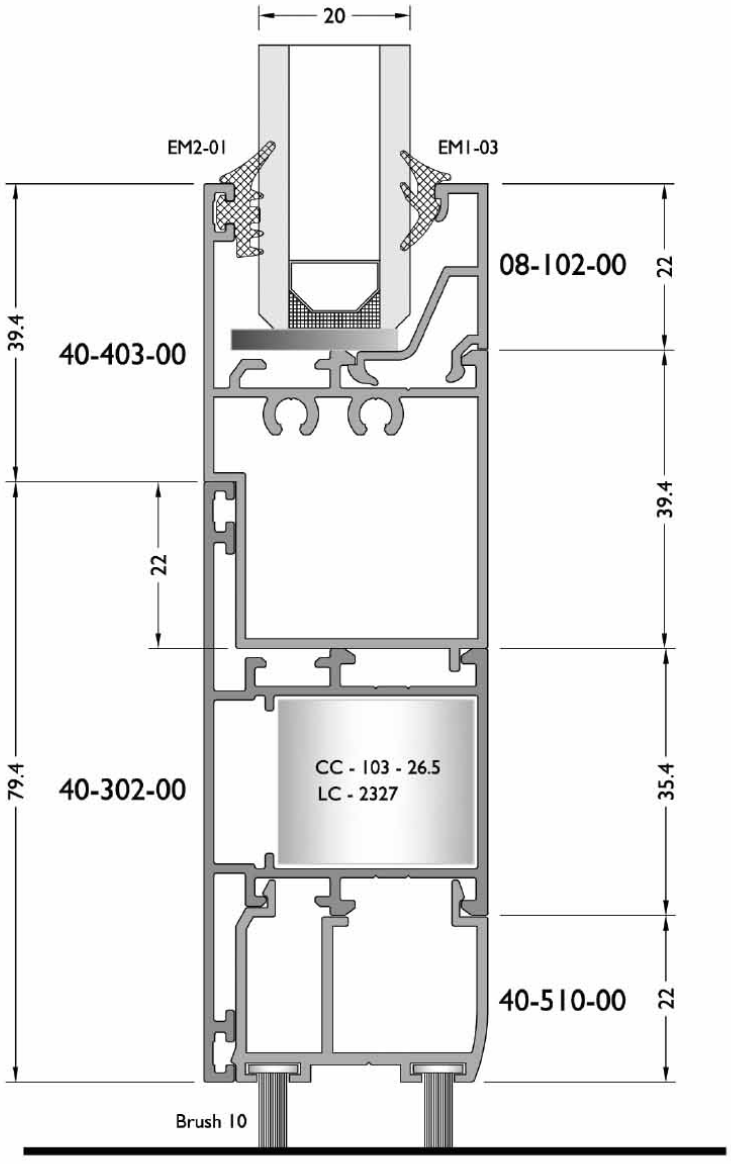
20
EM2-01
EM1-03
08-102-00
22
39.4
40-403-00
22
39.4
79.4
40-302-00
CC - 103 - 26.5
LC - 2327
35.4
40-510-00
22
Brush 10

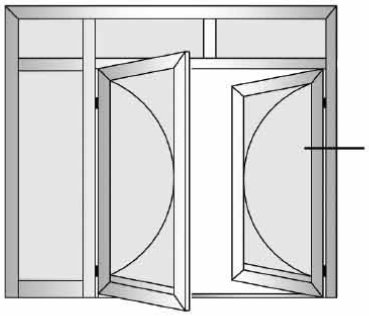

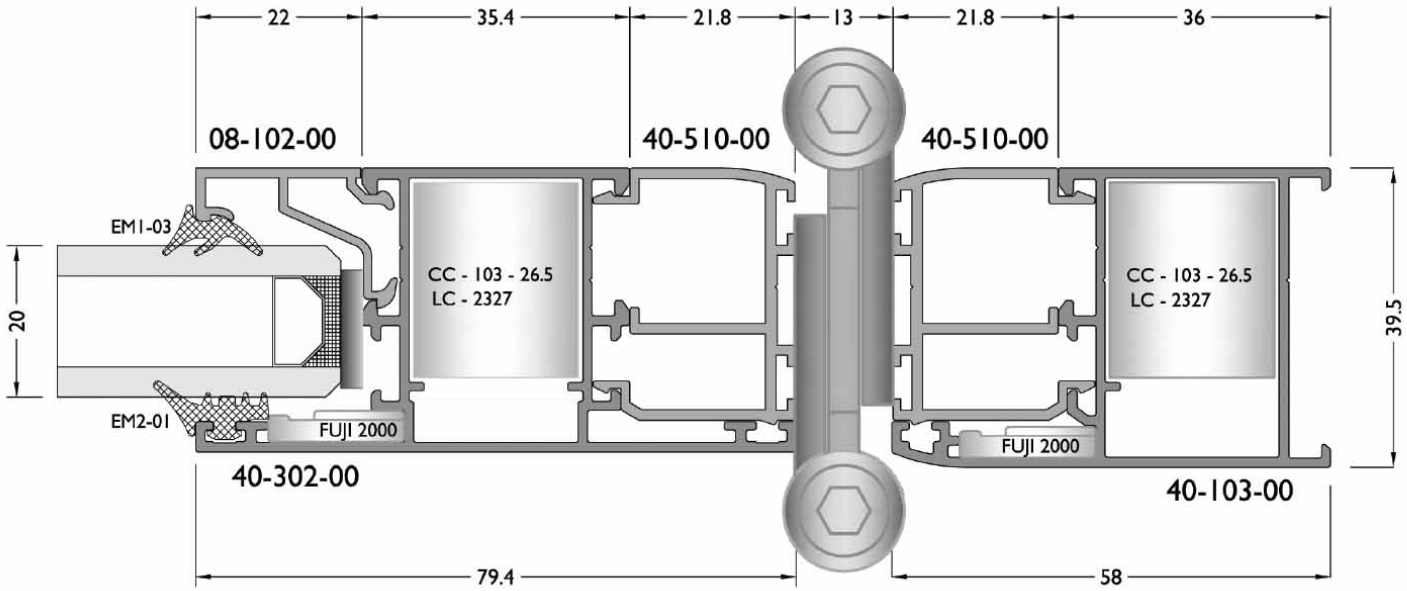
22
35.4
21.8
13
21.8
36
08-102-00
40-510-00
40-510-00
EM1-03
EM2-01
20
CC - 103 - 26.5
LC - 2327
CC - 103 - 26.5
LC - 2327
39.5
FUJI 2000
FUJI 2000
40-302-00
40-103-00
79.4
58

Perimetric**details**

Perimetric**details**

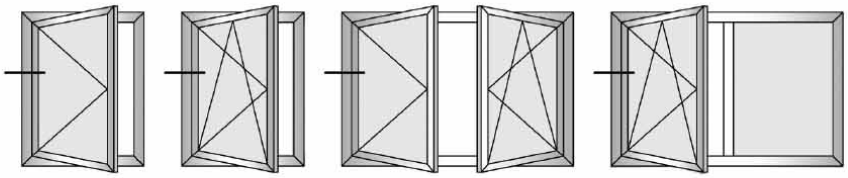

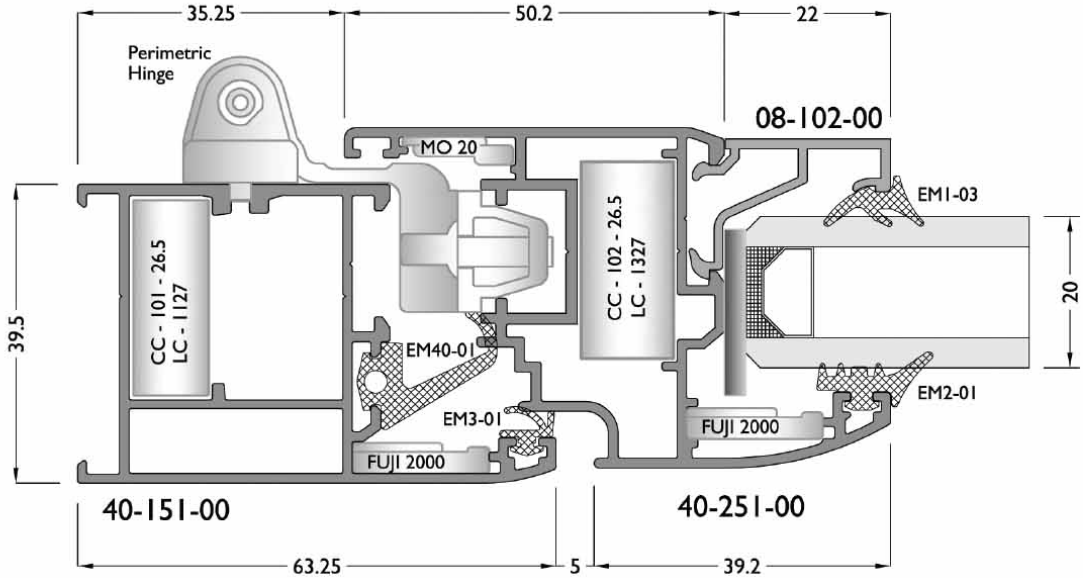
35.25
50.2
22
Perimetric Hinge
08-102-00
MO 20
EM1-03
CC - 101 - 26.5
LC - 1127
CC - 102 - 26.5
LC - 1327
39.5
20
EM40-01
EM3-01
EM2-01
FUJI 2000
FUJI 2000
40-151-00
40-251-00
63.25
5
39.2

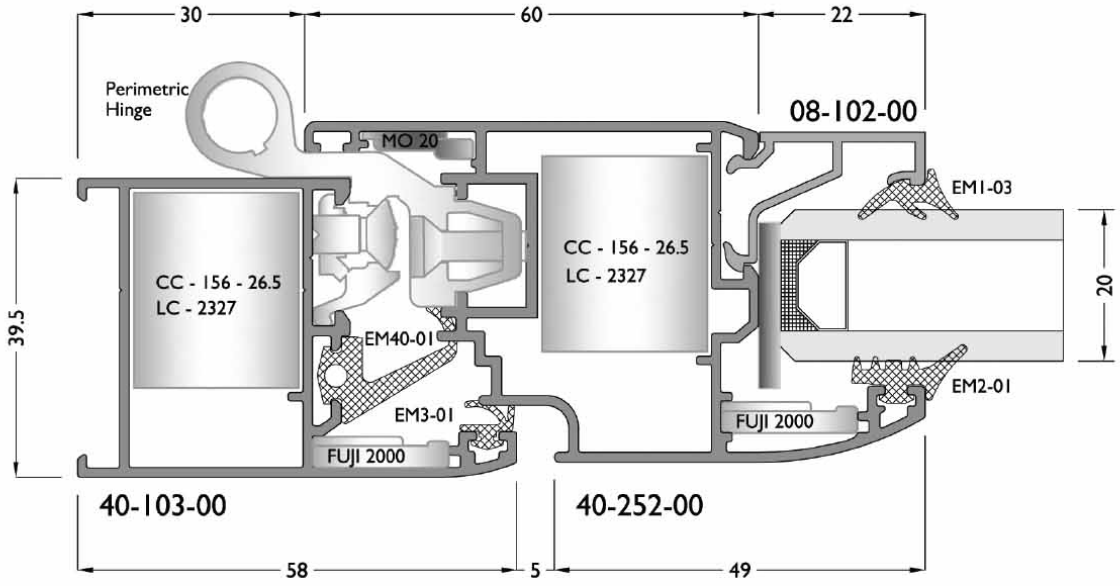
30
60
22
Perimetric Hinge
08-102-00
MO 20
EM1-03
CC - 156 - 26.5
LC - 2327
CC - 156 - 26.5
LC - 2327
39.5
20
EM40-01
EM3-01
EM2-01
FUJI 2000
FUJI 2000
40-103-00
40-252-00
58
5
49

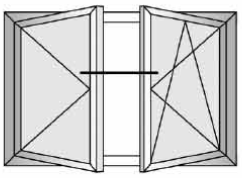

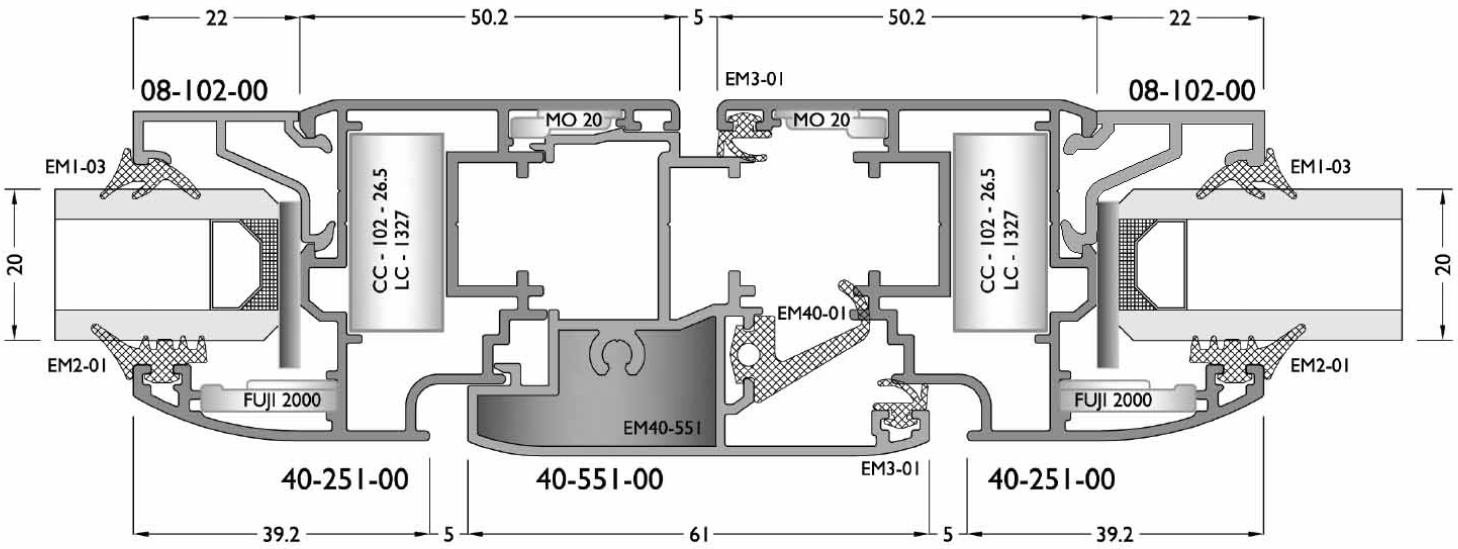
22
50.2
5
50.2
22
08-102-00
EM3-01
08-102-00
MO 20
MO 20
EM1-03
EM1-03
CC - 102 - 26.5
LC - 1327
CC - 102 - 26.5
LC - 1327
20
20
EM40-01
EM2-01
EM2-01
FUJI 2000
FUJI 2000
EM40-551
EM3-01
40-251-00
40-551-00
40-251-00
39.2
5
61
5
39.2

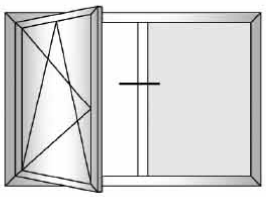

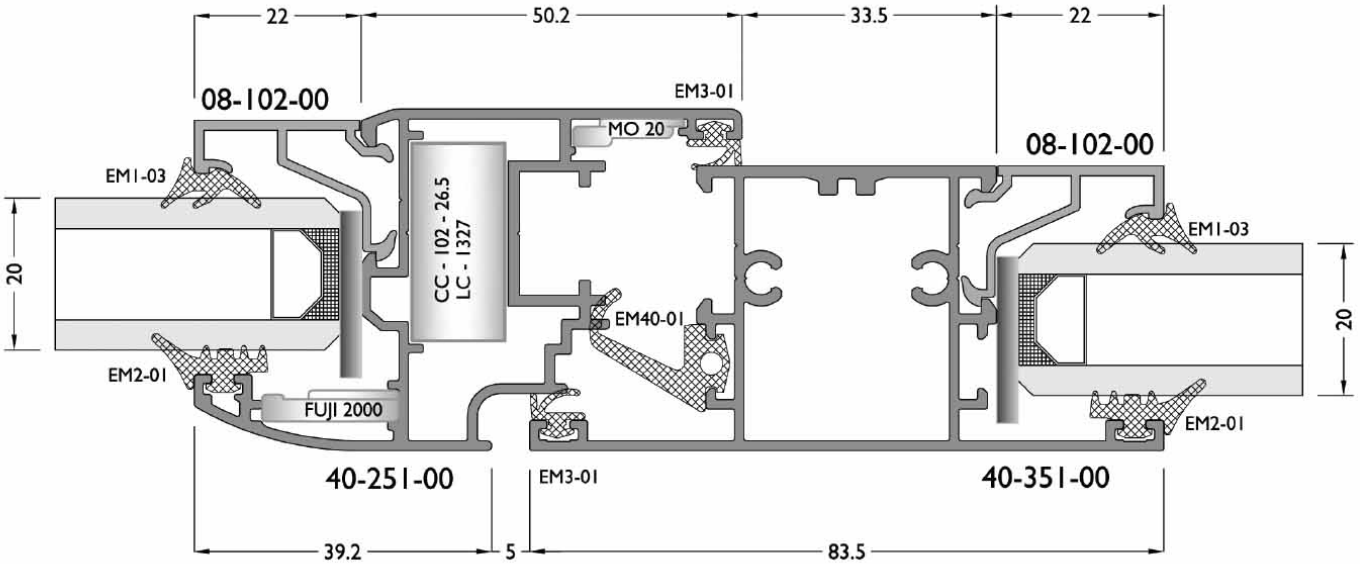
22
50.2
33.5
22
08-102-00
EM3-01
MO 20
08-102-00
EM1-03
EM1-03
CC - 102 - 26.5
LC - 1327
20
20
EM40-01
EM2-01
EM2-01
FUJI 2000
40-251-00
EM3-01
40-351-00
39.2
5
83.5

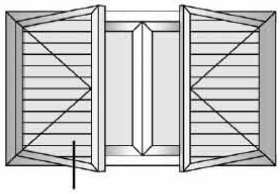

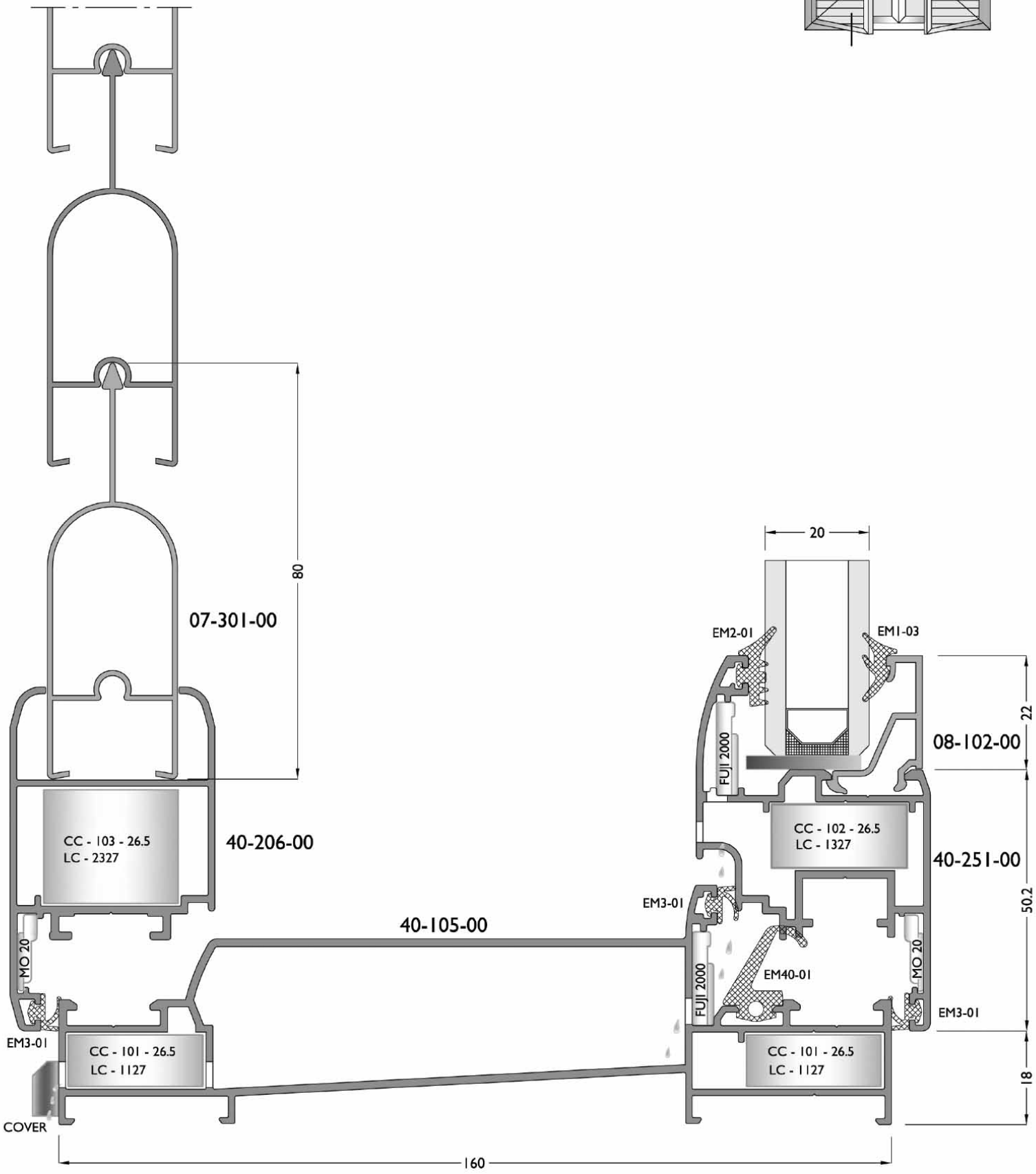
80
07-301-00
CC - 103 - 26.5
LC - 2327
40-206-00
MO 20
EM3-01
CC - 101 - 26.5
LC - 1127
COVER
40-105-00
20
EM2-01
EM1-03
FUJI 2000
08-102-00
22
CC - 102 - 26.5
LC - 1327
40-251-00
EM3-01
50.2
EM40-01
FUJI 2000
MO 20
EM3-01
CC - 101 - 26.5
LC - 1127
18
160

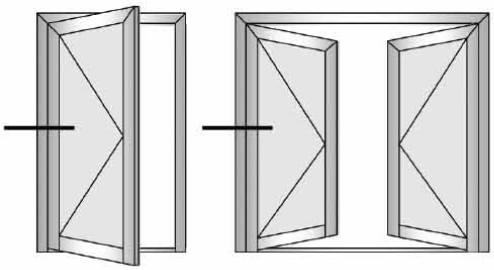

## Inside Opening Door

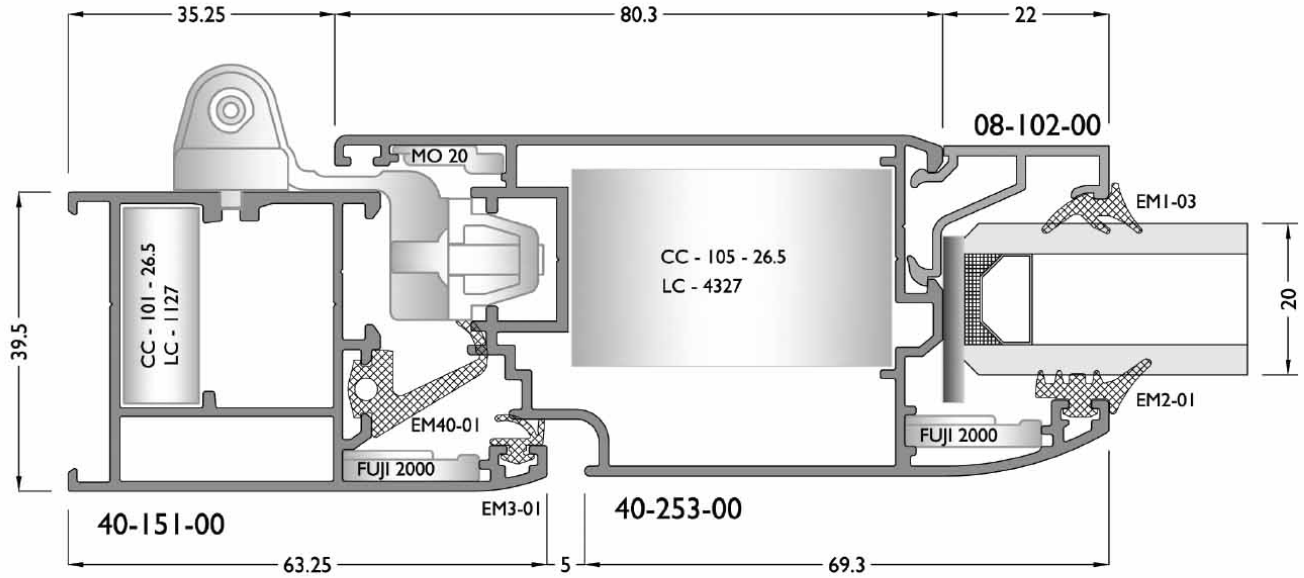


## Outside Opening Door

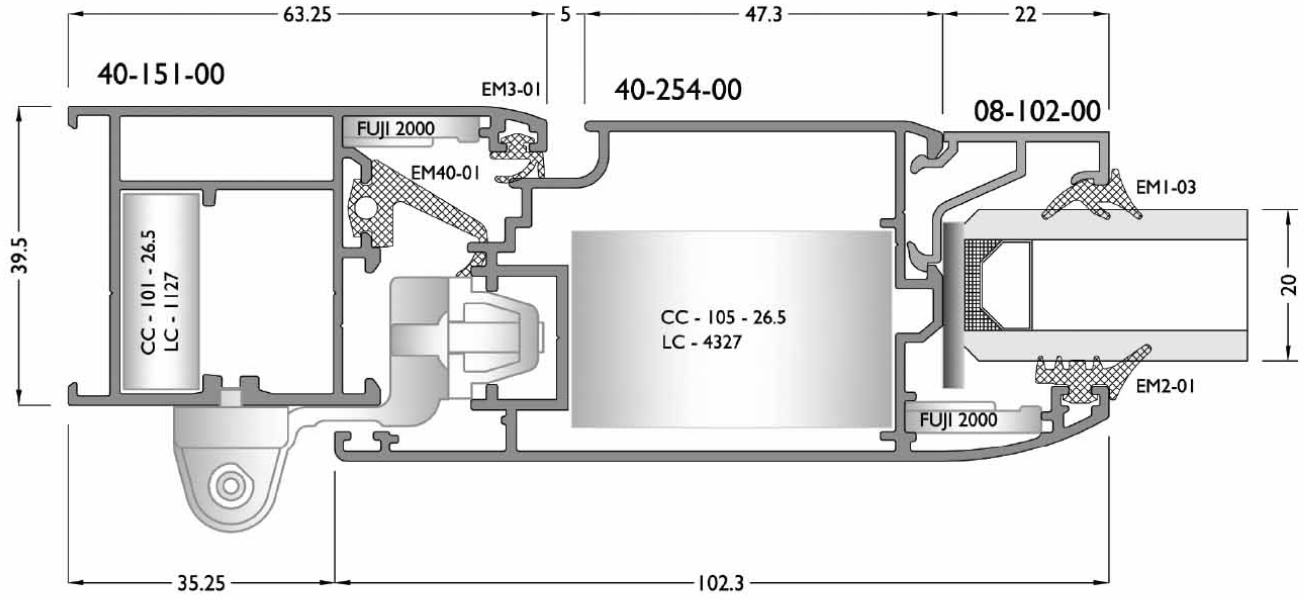

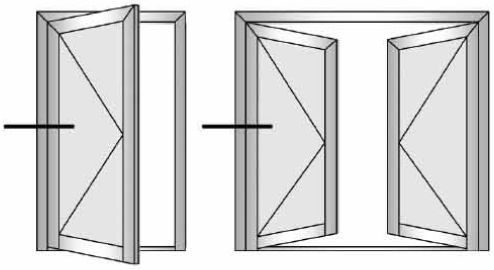

## Inside Opening Door

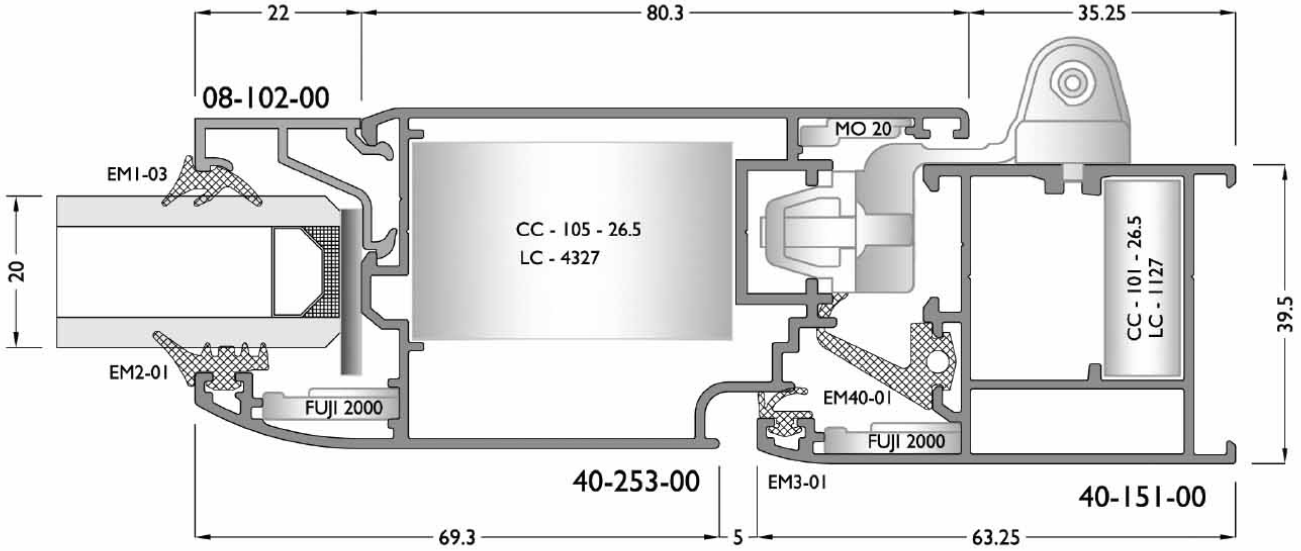


## Outside Opening Door

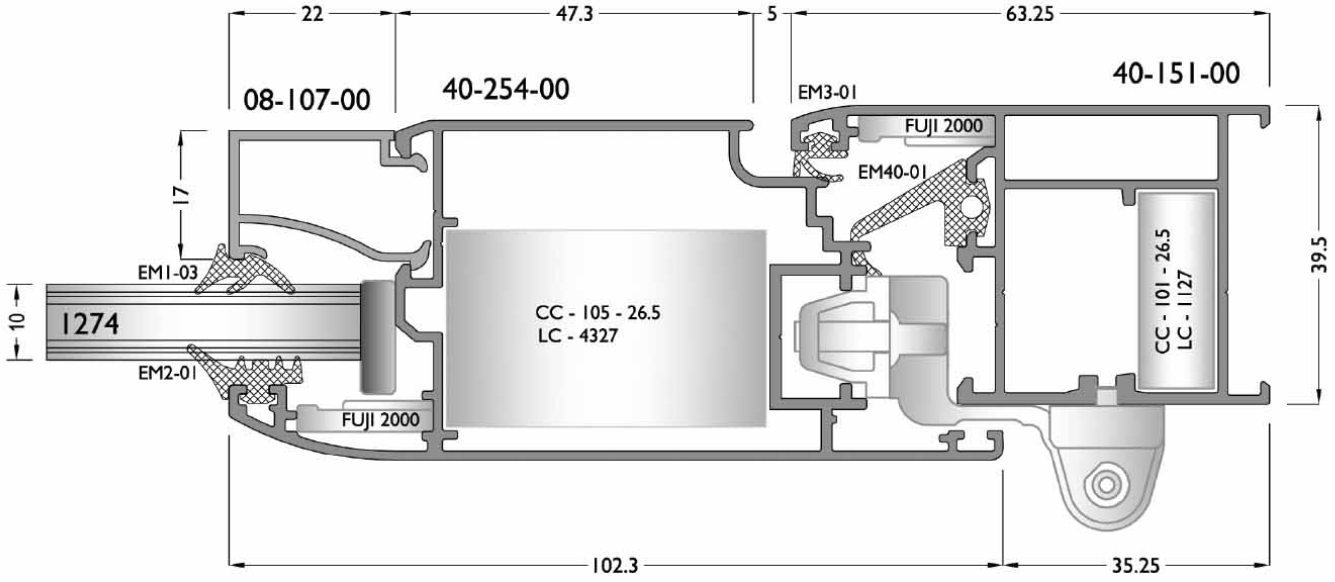

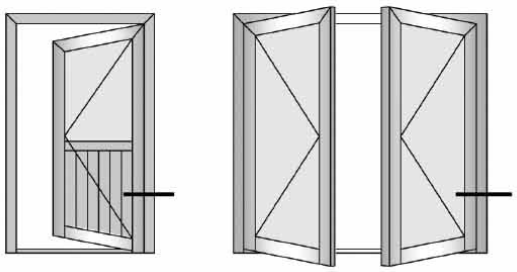

## Inside Opening Door

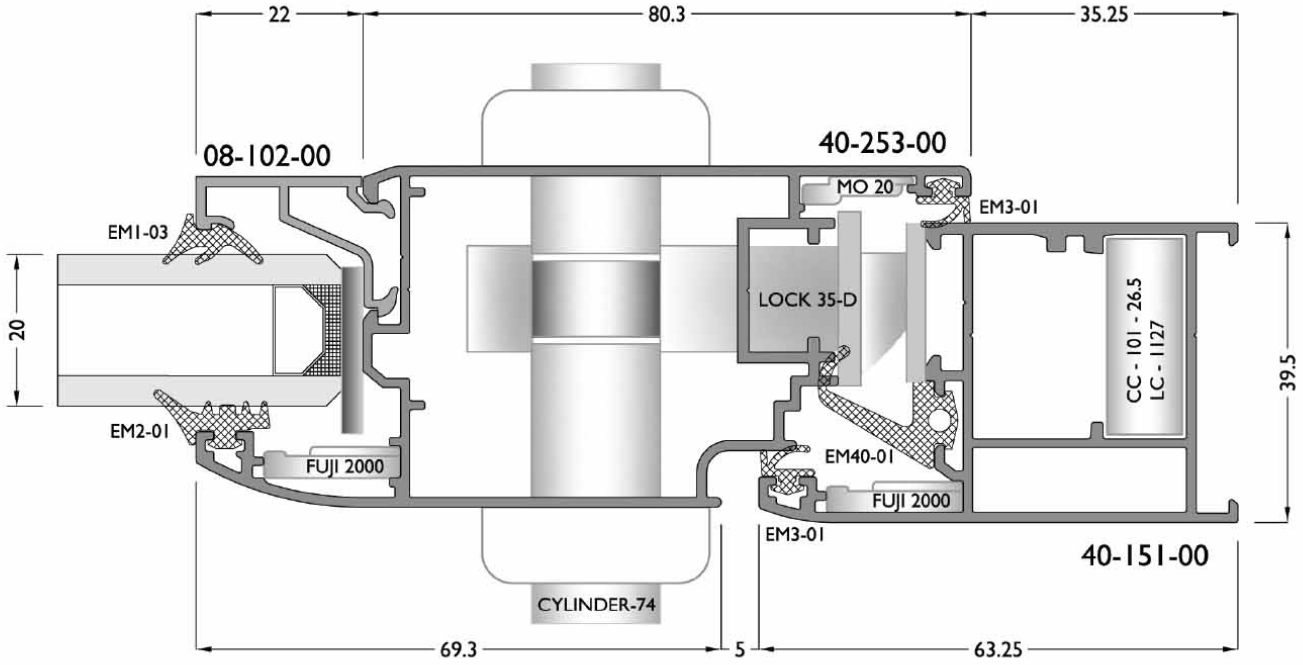


## Outside Opening Door

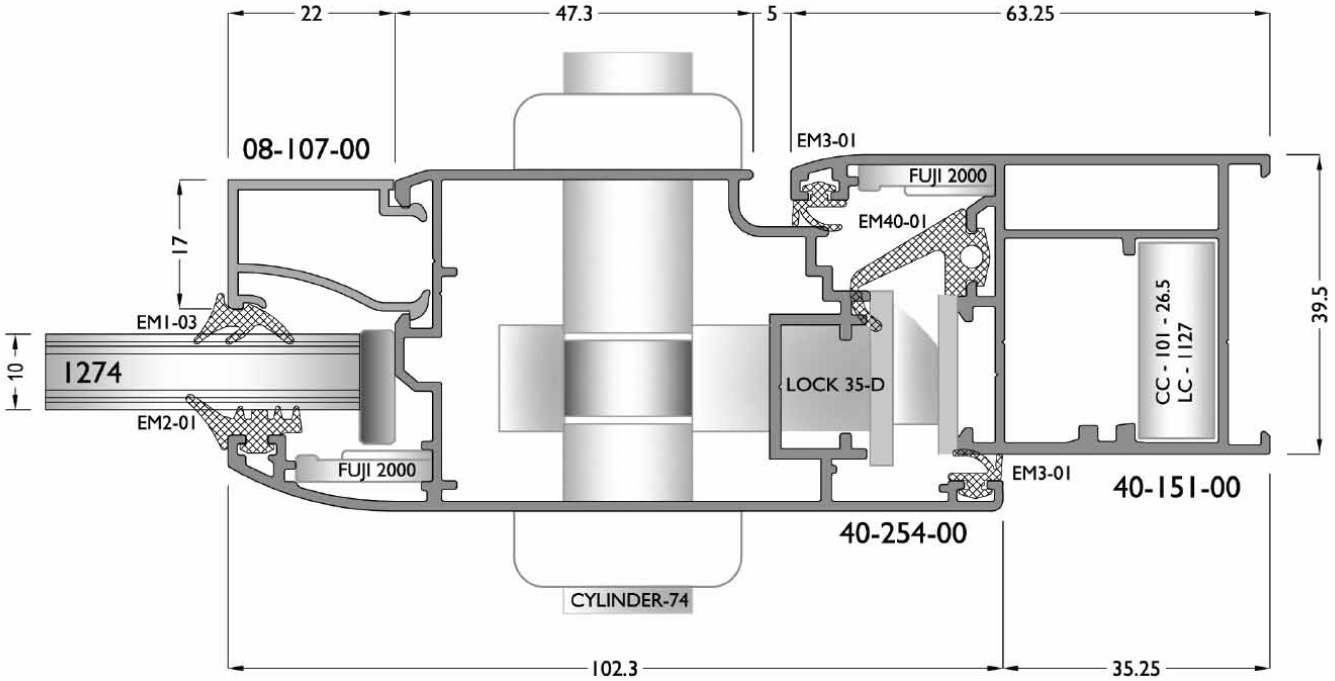

## Inside Opening Door

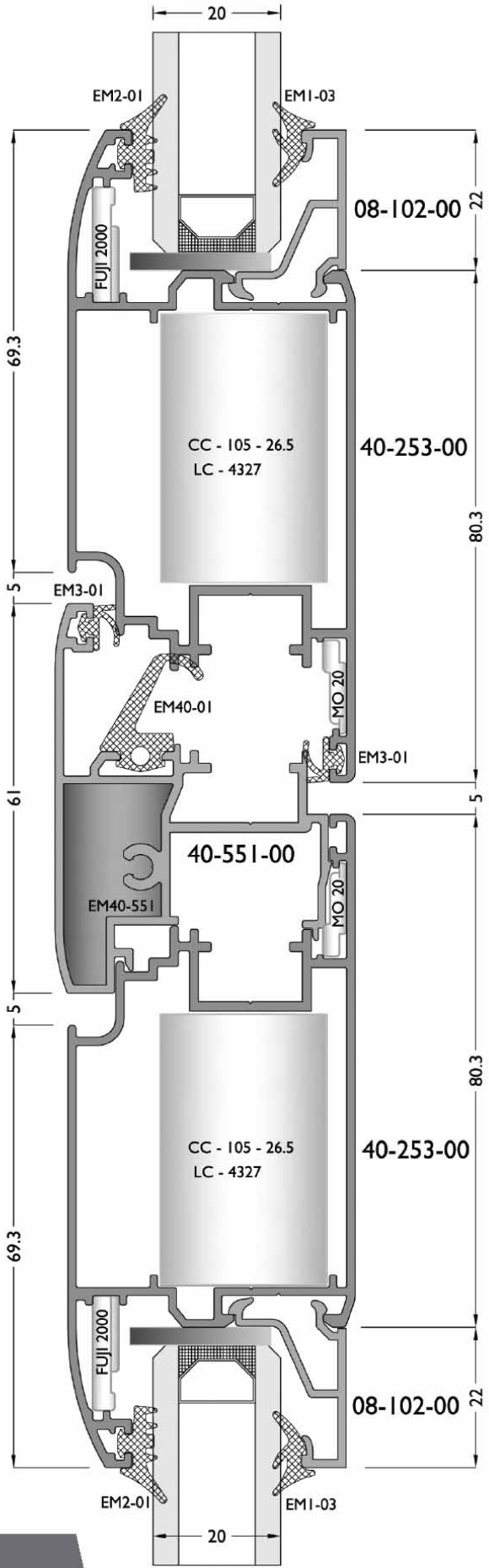


## Outside Opening Door

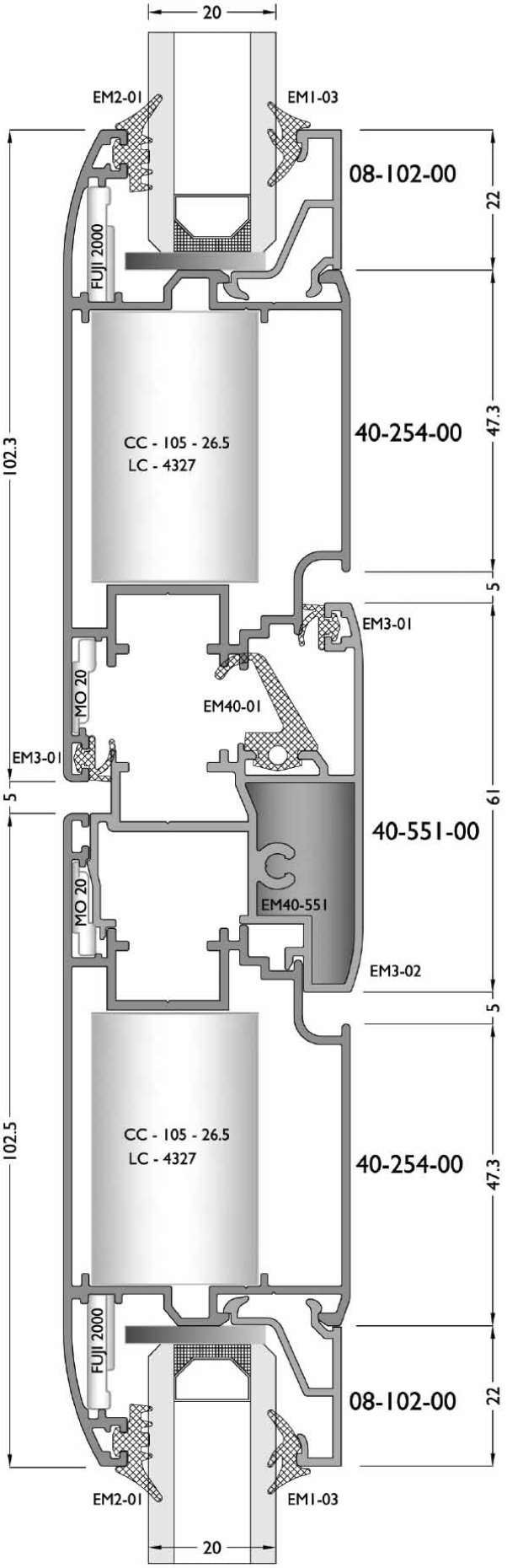


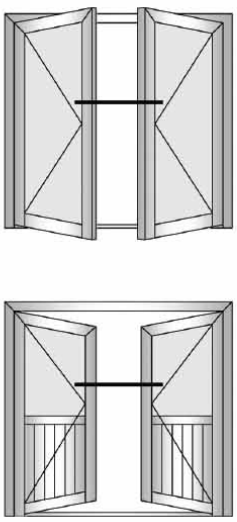

## Inside Opening Door

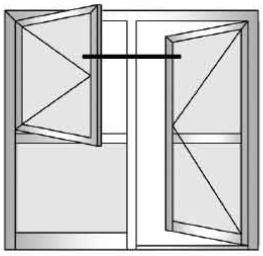

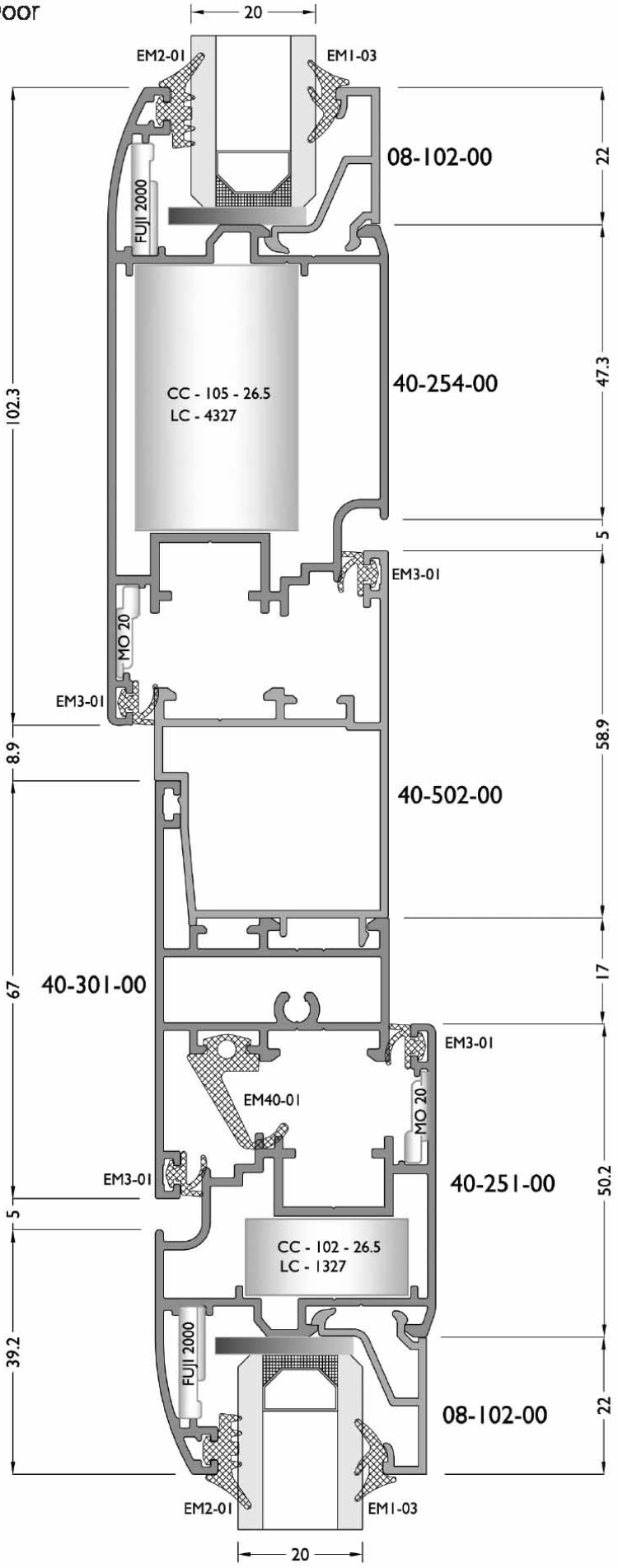

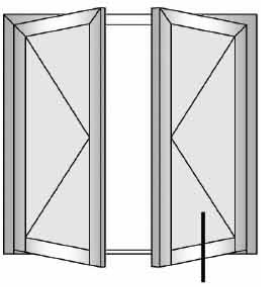

Outside Opening Door

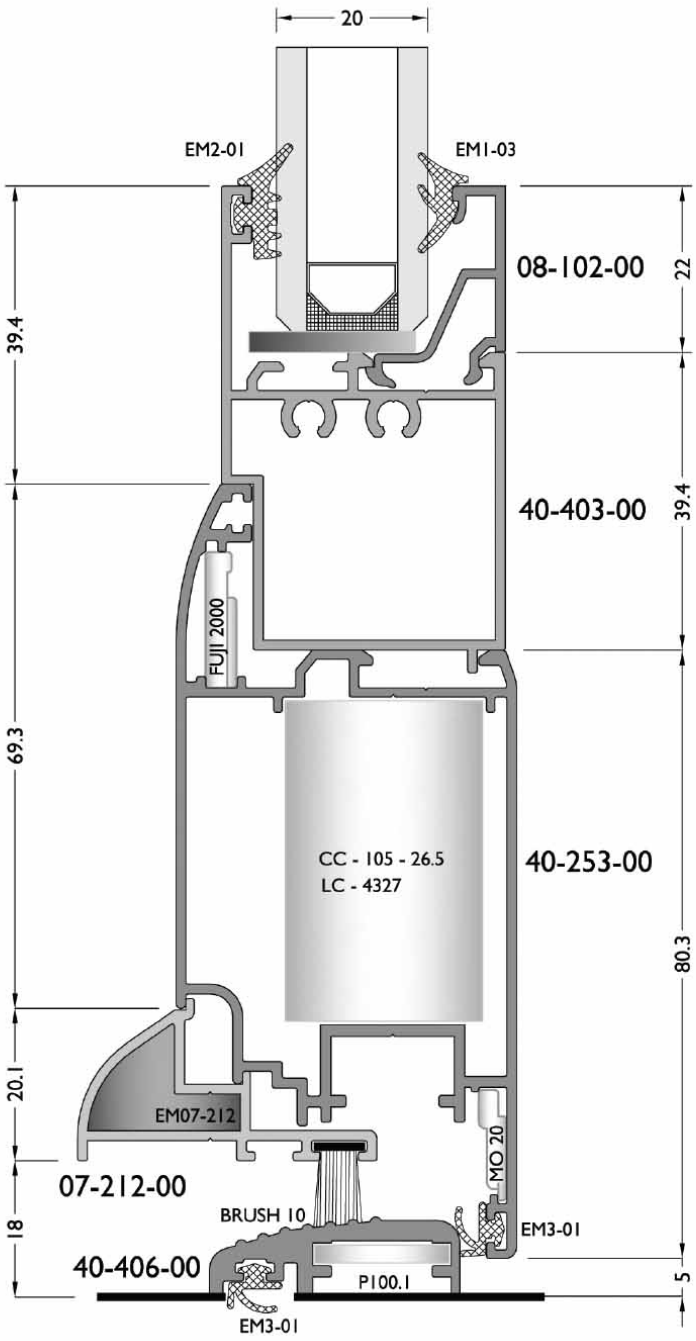


Inside Opening Door

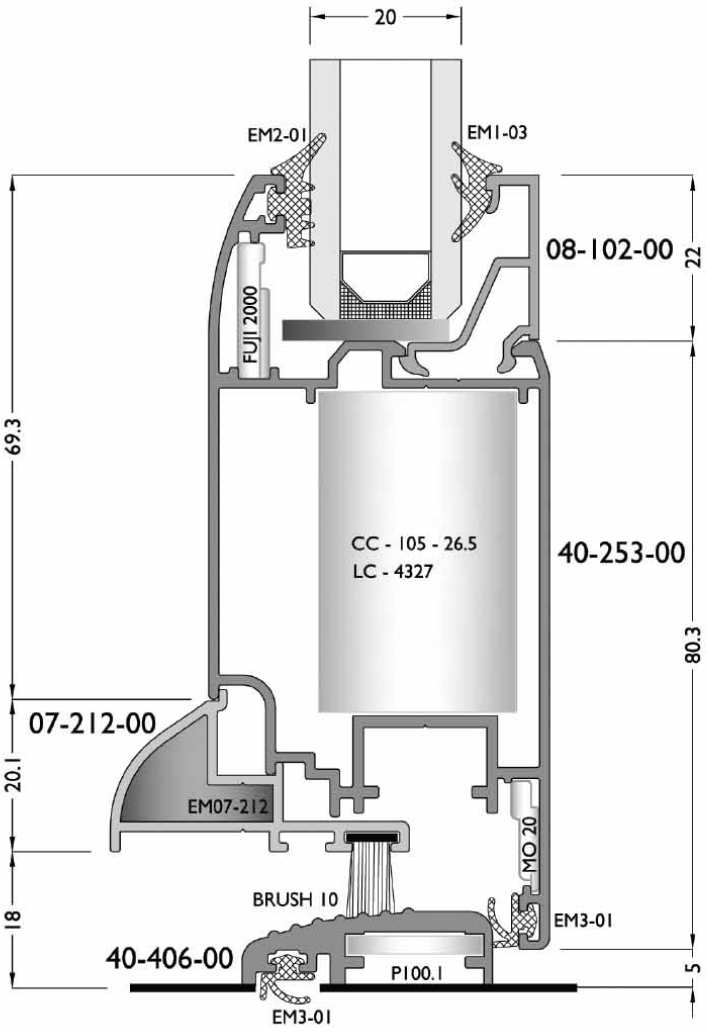

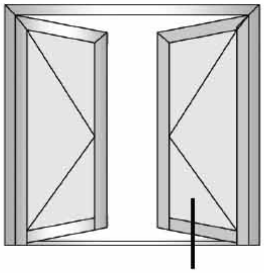

## Outside Opening Door

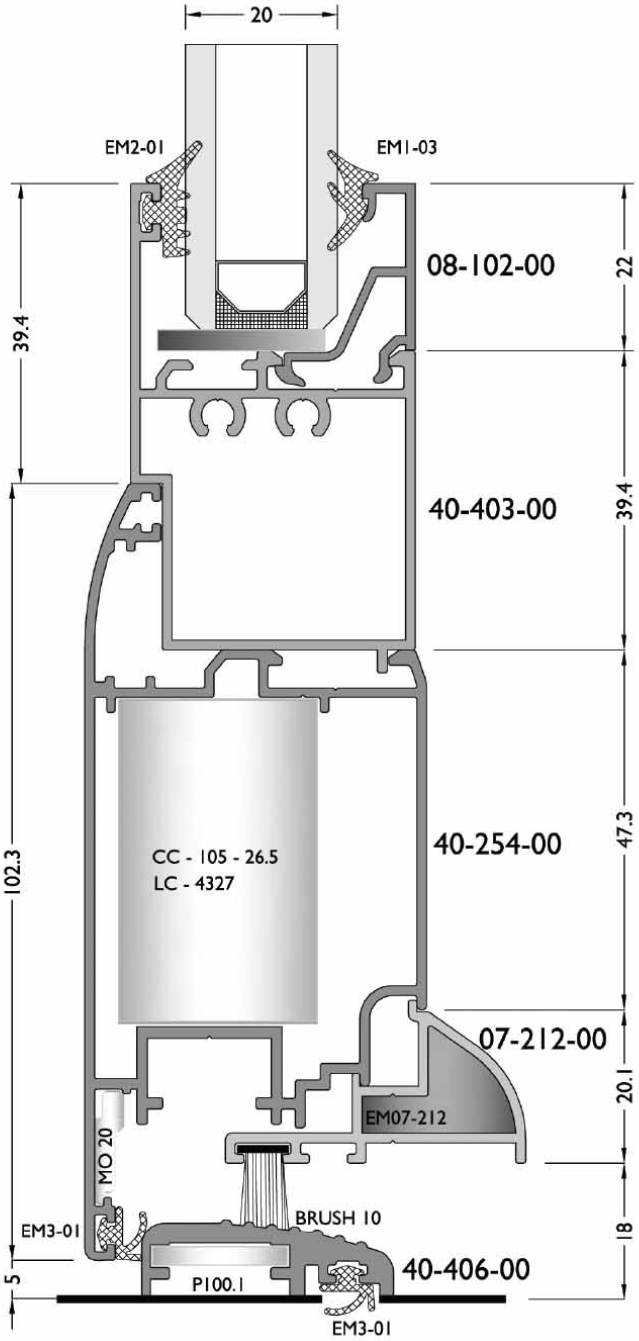


## Inside Opening Door

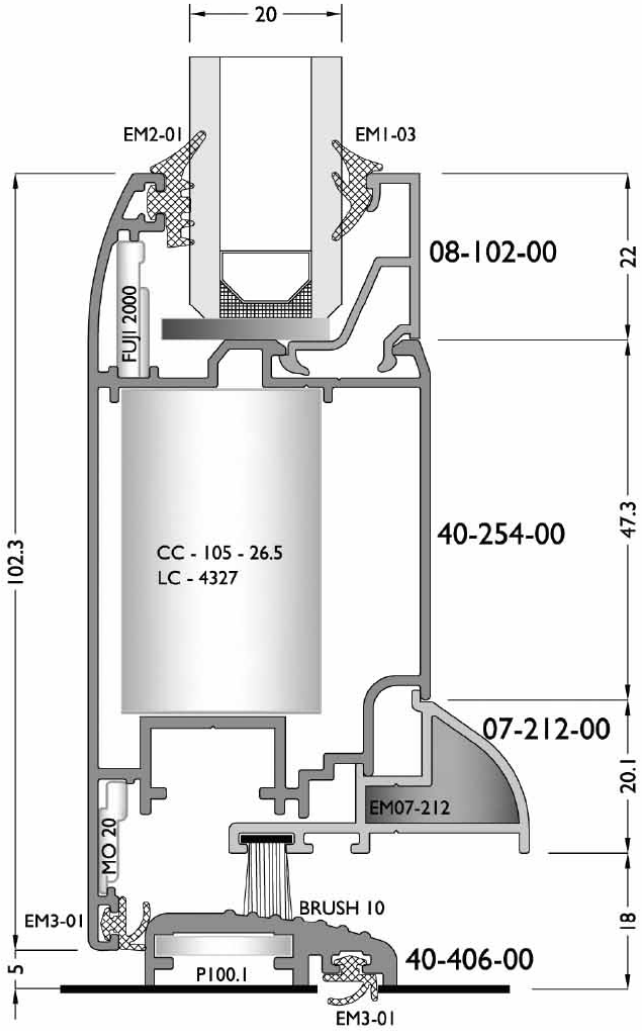

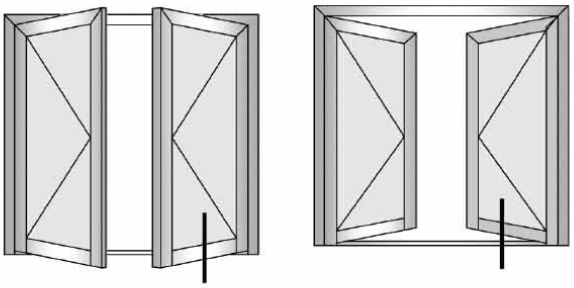

Inside Opening Door

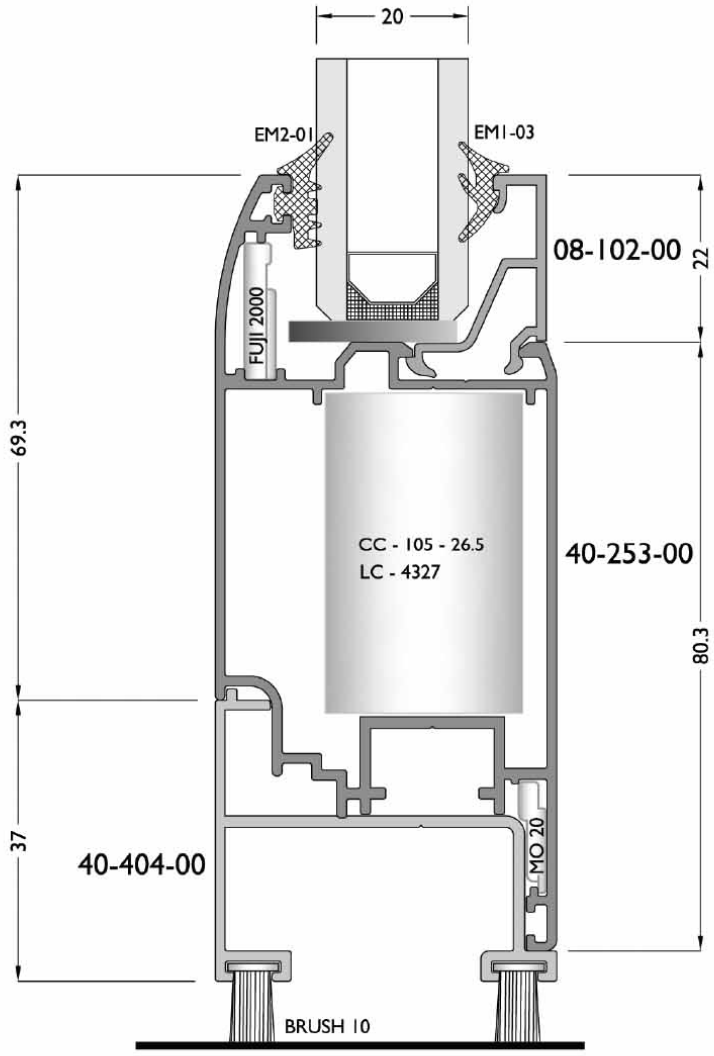


Outside Opening Door

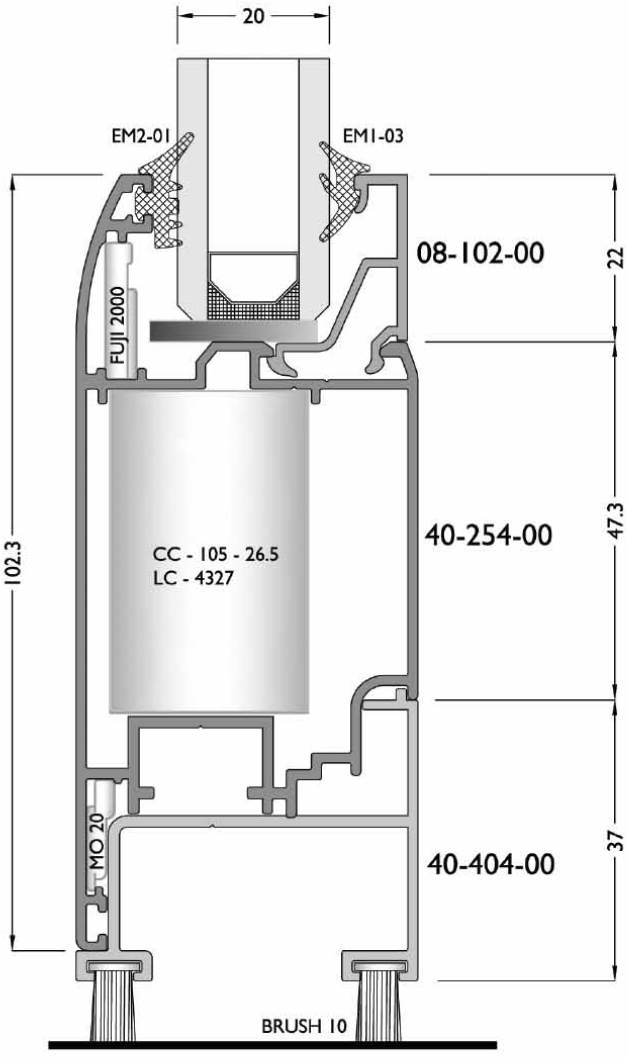

Glazing**table**

Glazing**table**

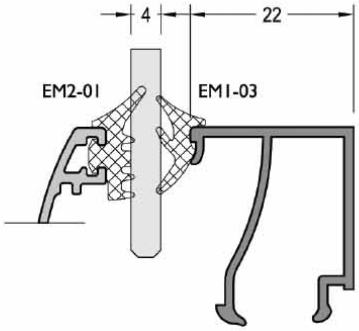


08-109-00

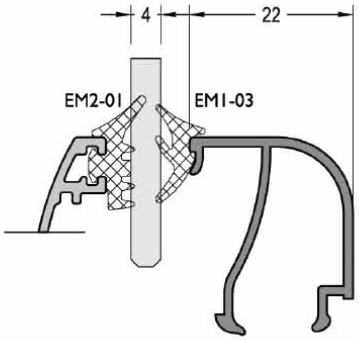


08-110-00

| GLAZING THICKNESS | GLAZING GASKET INSIDE | GLAZING GASKET OUTSIDE | GLAZING BEAD |
|---|---|---|---|
| 4 mm | EM1-03 | EM2-01 | 08-109-00 |
| 4 mm | EM1-03 | EM2-01 | 08-110-00 |
| 4 mm | EM1-03 | EM2-01 | 08-111-00 |
| 5 mm | EM1-02 | EM2-01 | 08-109-00 |
| 5 mm | EM1-02 | EM2-01 | 08-110-00 |
| 5 mm | EM1-02 | EM2-01 | 08-111-00 |

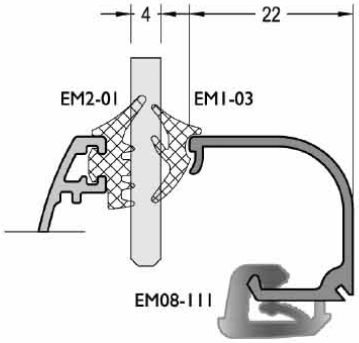


08-111-00

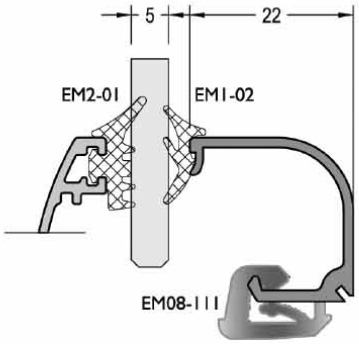


08-111-00

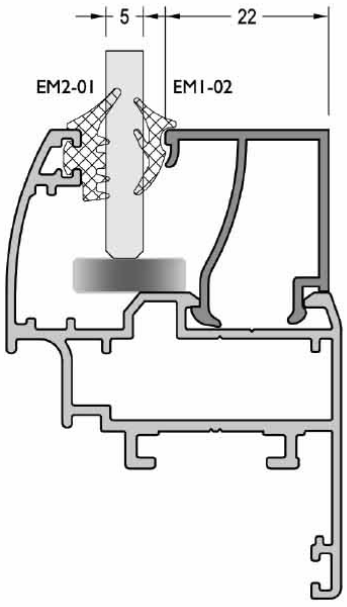


08-109-00

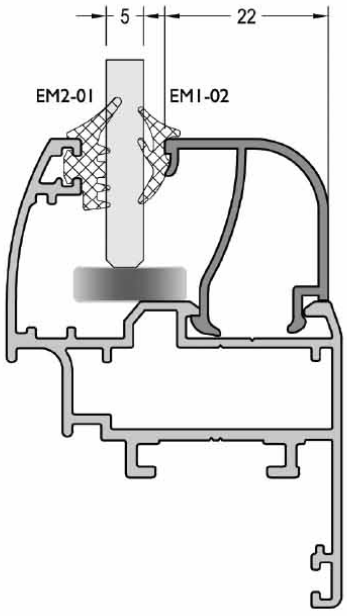


08-110-00

| GLAZING THICKNESS | GLAZING GASKET INSIDE | GLAZING GASKET OUTSIDE | GLAZING BEAD |
|---|---|---|---|
| 6 mm | EM1-04 | EM2-01 | 08-108-00 |
| 8 mm | EM1-04 | EM2-01 | 08-107-00 |
| 10 mm | EM1-02 | EM2-01 | 08-107-00 |
| 20 mm | EM1-02 | EM2-01 | 08-102-00 |
| 22 mm | EM1-03 | EM2-01 | 08-101-00 |

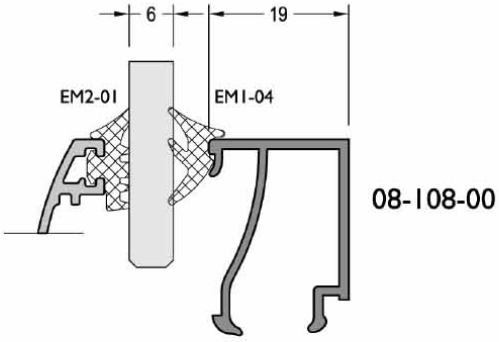


08-108-00

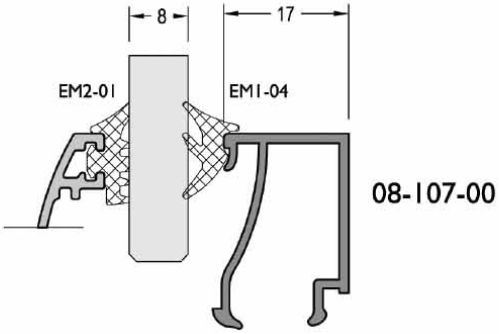


08-107-00

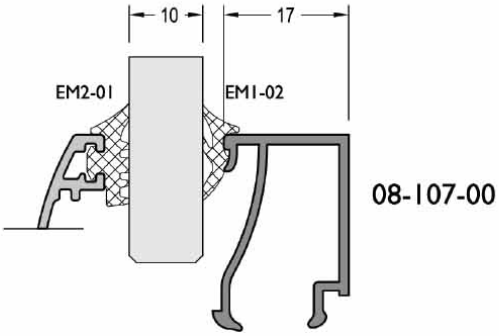


08-107-00

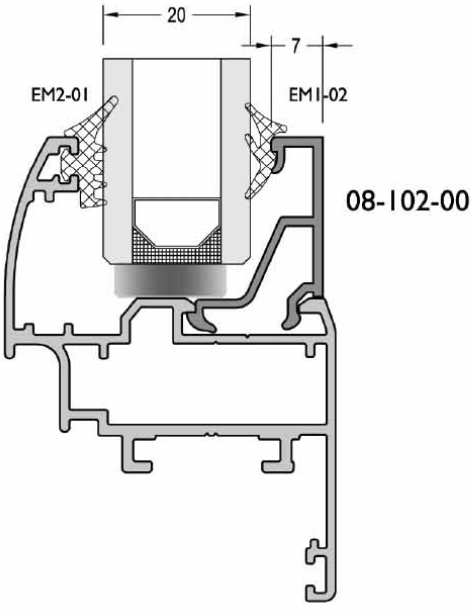


08-102-00

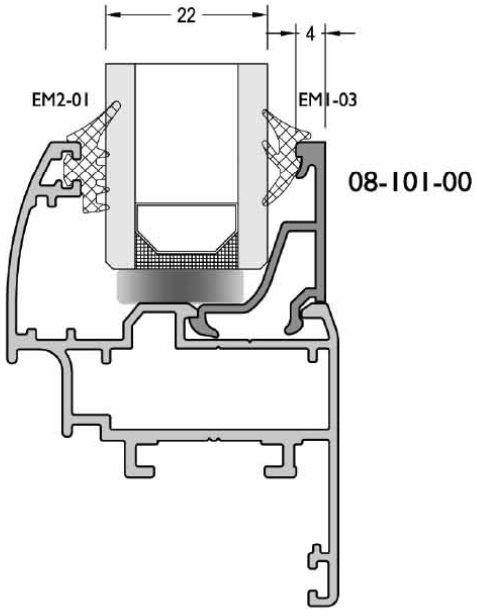


08-101-00

Accessories

# Accessories

| CODE | DRAWING | APPLICATION | DESCRIPTION | THEORETICAL WEIGHT kg/m | IN ONE PACKAGE |
|---|---|---|---|---|---|
| EM1-02 |  | 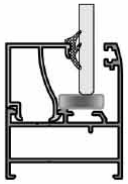 | Glazing Gasket Inside (EPDM) | 0.050 | 300 m |
| EM1-03 |  | 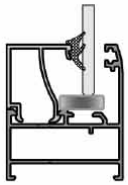 | Glazing Gasket Inside (EPDM) | 0.060 | 250 m |
| EM1-04 |  | 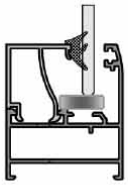 | Glazing Gasket Inside (EPDM) | 0.070 | 215 m |
| EM2-01 |  | 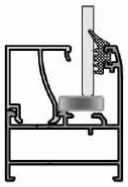 | Glazing Gasket Outside (EPDM) | 0.055 | 270 m |
| EM3-01 |  | 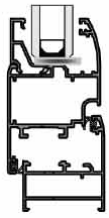 | Acoustical Gasket (EPDM) | 0.032 | 465 m |
| EM40-01 |  | 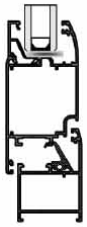 | Central Gasket (EPDM) | 0.115 | 130 m |

| ACCESSORY CODE | DRAWİNG | APPLICATION PROFILES | APPLICATION DETAIL |
|---|---|---|---|
| EM40-501 ALUminium | 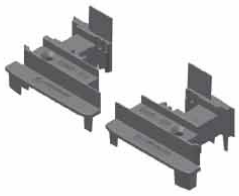 | 40C-501-00 | 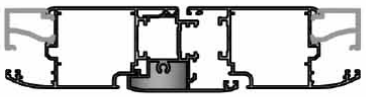 |
| EM40-551 PERImetric | 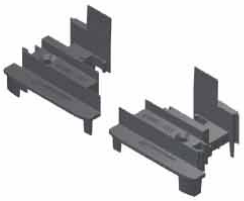 | 40C-551-00 | 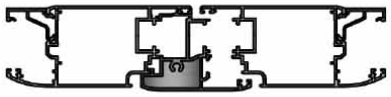 |
| EM07-212 | 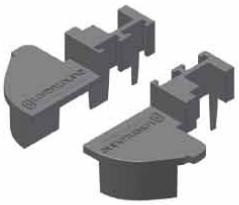 | 07-212-00 | 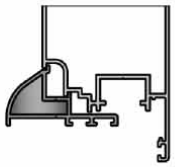 |
| EM08-111 |  | 08-111-00 | 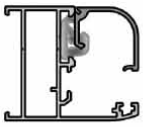 |
| EM15-200 | 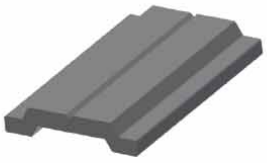 | ROD PROFILE (Euro Section 1) | 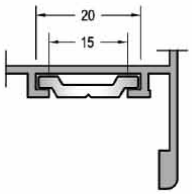 |
| EM10-01 (White)<br>EM10-02 (Black)<br>EM10-03 (Brown)<br>EM10-04 (Gray)<br>EM10-05 (Light Brown) |  | Drainage Cap | 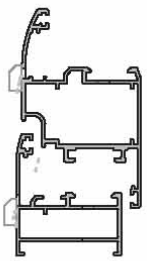 |

## **CORNER ACCESSORIES** / KÖŞE BAĞLANTILAR

| CODE / KOD | DRAWING / ÇİZİM | APPLICATION / UYGULAMA | DESCRIPTION<br>AÇIKLAMA | MATERIAL<br>MALZEME | APPLICATION PROFILES<br>ÇALIŞTIĞI PROFİLLER |
|---|---|---|---|---|---|
| LC-1127 | 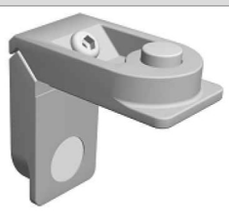 | 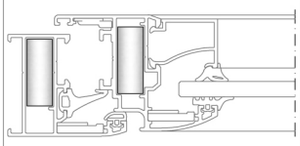 | CORNER JOINT<br>KÖŞE BAĞLANTI | DIE-CAST<br>DÖKÜM | 40C-101-00<br>40C-102-00<br>40C-105-00<br>40C-107-00<br>40C-151-00<br>40C-201-00<br>40C-202-00 |
| LC-1327 |  | 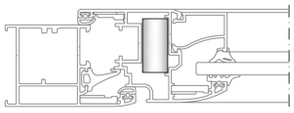 | CORNER JOINT<br>KÖŞE BAĞLANTI | DIE-CAST<br>DÖKÜM | 40C-251-00 |
| LC-2327 |  | 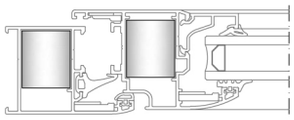 | CORNER JOINT<br>KÖŞE BAĞLANTI | DIE-CAST<br>DÖKÜM | 40C-103-00<br>40C-104-00<br>40C-106-00<br>40C-107-00<br>40C-115-00<br>40C-123-00<br>40C-203-00<br>40C-206-00<br>40C-207-00<br>40C-252-00<br>40C-302-00 |
| LC-4327 |  | 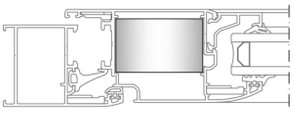 | CORNER JOINT<br>KÖŞE BAĞLANTI | DIE-CAST<br>DÖKÜM | 40C-204-00<br>40C-205-00<br>40C-253-00<br>40C-254-00 |
| LC174 |  | 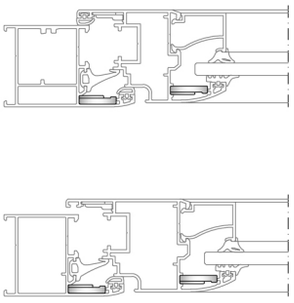 | CORNER JOINT<br>KÖŞE BAĞLANTI | DIE-CAST<br>DÖKÜM | 40C-101-00<br>40C-102-00<br>40C-103-00<br>40C-104-00<br>40C-105-00<br>40C-106-00<br>40C-107-00<br>40C-115-00<br>40C-123-00<br>40C-151-00<br>40C-201-00<br>40C-203-00<br>40C-204-00<br>40C-205-00<br>40C-251-00<br>40C-252-00<br>40C-253-00<br>40C-254-00<br>40C-302-00 |

## **CORNER ACCESSORIES** / KÖŞE BAĞLANTILAR

| CODE / KOD | DRAWING / ÇİZİM | APPLICATION / UYGULAMA | DESCRIPTION<br>AÇIKLAMA | MATERIAL<br>MALZEME | APPLICATION PROFILES<br>ÇALIŞTIĞI PROFİLLER |
|---|---|---|---|---|---|
| PK 20 |  | 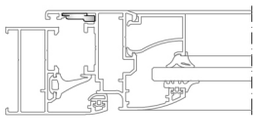 | CORNER JOINT<br>KÖŞE BAĞLANTI | PLASTİK | 40C-201-00<br>40C-202-00<br>40C-203-00<br>40C-204-00<br>40C-205-00<br>40C-206-00<br>40C-207-00<br>40C-251-00<br>40C-252-00<br>40C-253-00<br>40C-254-00 |
| P 100.1 | 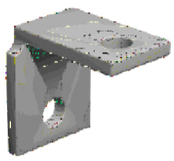 | 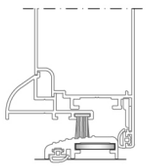 | CORNER JOINT<br>KÖŞE BAĞLANTI | METAL | 40C-406-00 |
| MK 19 |  | 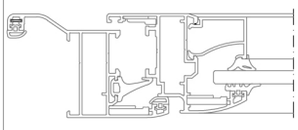 | CORNER JOINT<br>KÖŞE BAĞLANTI | METAL | 40C-102-00<br>40C-106-00<br>07-101-00 |
| MK 20.1 |  | 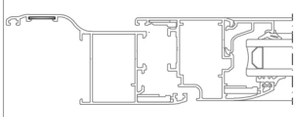 | CORNER JOINT<br>KÖŞE BAĞLANTI | METAL | 40C-123-00<br>07-102-00<br>07-103-00 |

## **CUTTED CORNER JOINTS** / KESİLMİŞ KÖŞE TAKOZLAR

| CODE / KOD | DRAWING / ÇİZİM | APPLICATION / UYGULAMA | PROFILE CODE PROFİL KOD | CUTTING SIZE KESİM ÖLÇÜSÜ | APPLICATION PROFILES ÇALIŞTIĞI PROFİLLER |
|---|---|---|---|---|---|
| CC-101-26.5 |  | 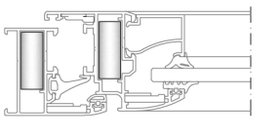 | 09-101-00 | 26.5 mm | 40C-101-00<br>40C-102-00<br>40C-105-00<br>40C-107-00<br>40C-151-00<br>40C-201-00<br>40C-202-00 |
| CC-102-26.5 |  | 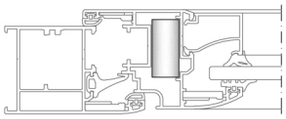 | 09-102-00 | 26.5 mm | 40C-251-00 |
| CC-103-26.5 | 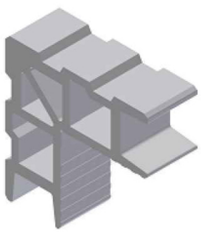 | 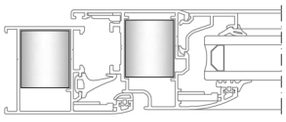 | 09-103-00 | 26.5 mm | 40C-103-00<br>40C-104-00<br>40C-106-00<br>40C-107-00<br>40C-115-00<br>40C-123-00<br>40C-203-00<br>40C-206-00<br>40C-207-00<br>40C-252-00<br>40C-302-00 |
| CC-105-26.5 | 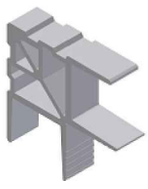 | 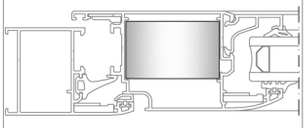 | 09-105-00 | 26.5 mm | 40C-204-00<br>40C-205-00<br>40C-253-00<br>40C-254-00 |

## **SPECIAL EXTRUDED CORNER JOINT FOR PERIMETRIC** / PERİMETRİK KÖŞE TAKOZLAR

| | | | | | |
|---|---|---|---|---|---|
| CC-156-26.5 |  | 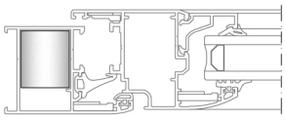 | 09-156-00 | 26.5 mm | 40C-103-00<br>40C-104-00<br>40C-106-00<br>40C-123-00 |

# Lorenzoline Punching Machine

**Produche Code**

## LC01-01







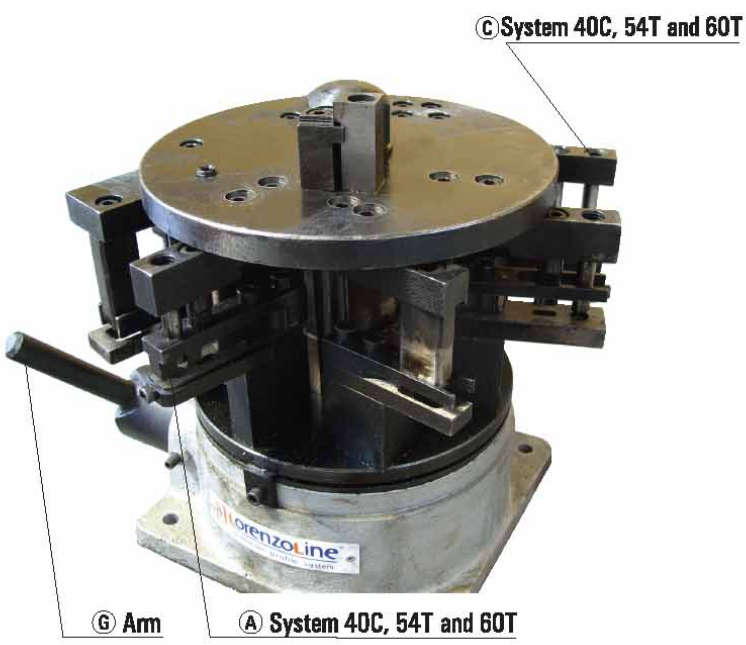




Cutting**sizes**

Cutting**sizes**

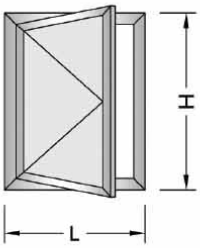


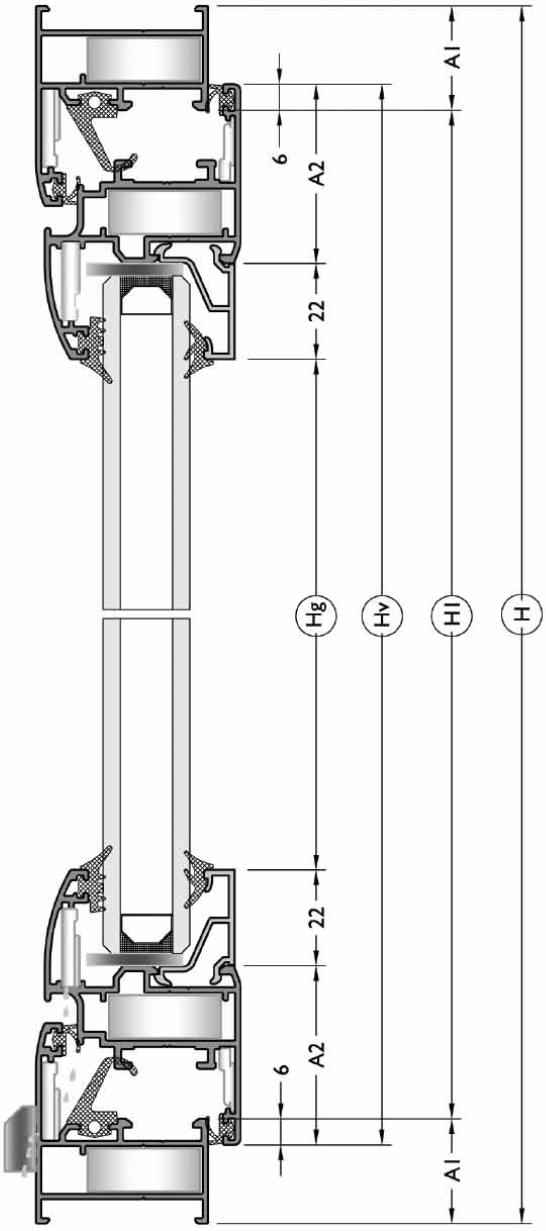


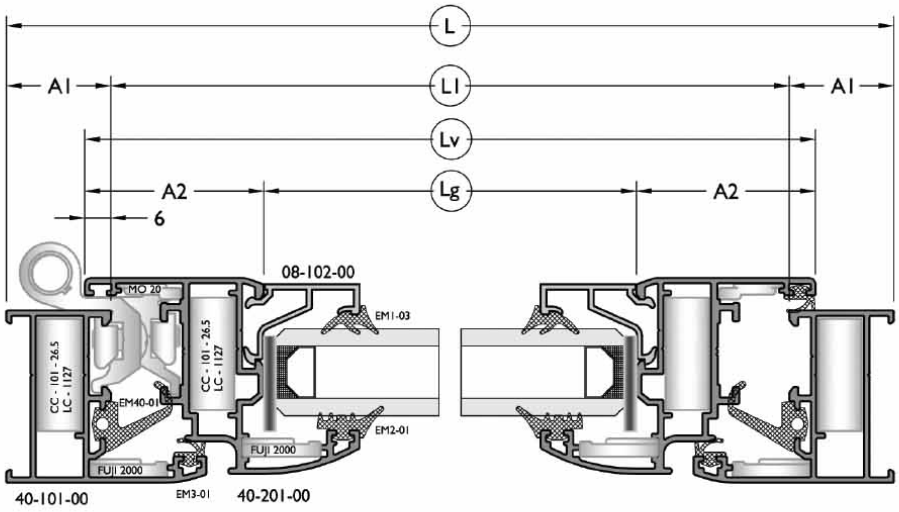


| Profile | | Cut | Quantity (pcs) | Dimensions (mm) |
|---|---|---|---|---|
| 40C-101-00 | | | 2 pcs | L |
| | | | 2 pcs | H |
| 40C-201-00 | | | 2 pcs | Lv=L-(A1+A1)+12 |
| | | | 2 pcs | Hv=H-(A1+A1)+12 |
| 08-102-00 | | | 2 pcs | Lg=Lv-(A2+A2) |
| | | | 2 pcs | Hg=Hv-(A2+A2+22+22) |

| Accessories | Quantity (pcs-m) | View |
|---|---|---|
| CC-101-26.5/LC 1127 | 8 pcs | |
| FUJI 2000 | 8 pcs | |
| MO 20 | 4 pcs | |
| EM40-01 | 2 Lv + 2 Hv | |
| EM1-03 | 2 Lg + 2 Hg | |
| EM2-01 | 2 Lg + 2 Hg | |
| EM3-01 | (Lv + Hv) x 4 | |

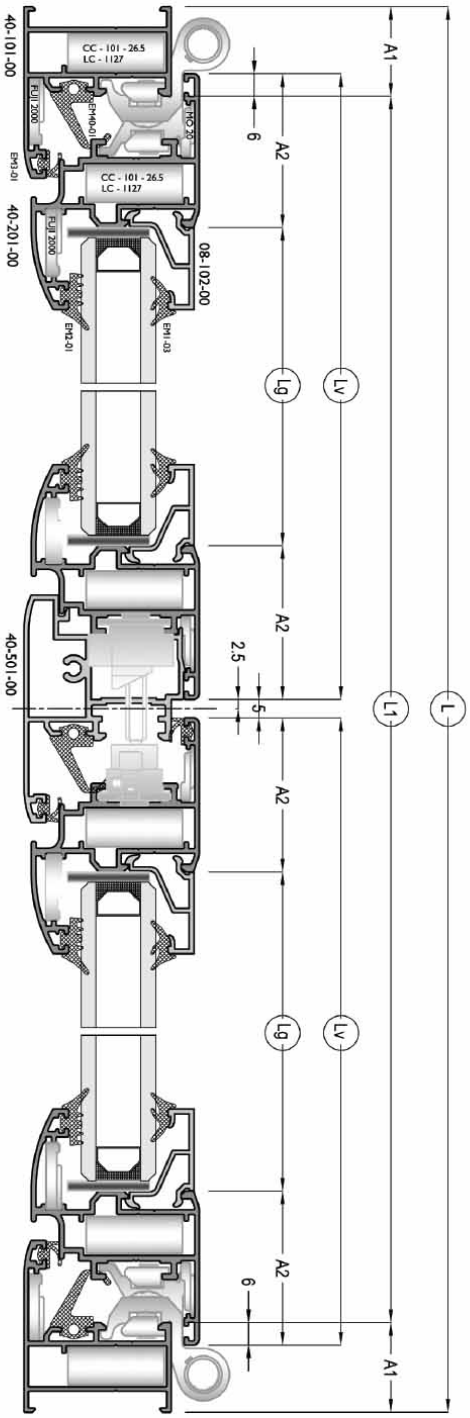


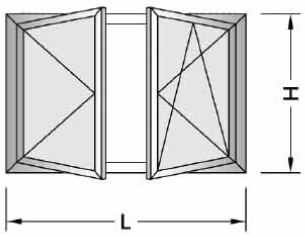


| Profile | Cut | Quantity (pcs) | Dimensions (mm) |
|---|---|---|---|
| 40C-101-00 | | 2 pcs | L |
| | | 2 pcs | H |
| 40C-201-00 | | 4 pcs | $Lv=\frac{L-(A1+A1)+7}{2}$ |
| | | 4 pcs | Hv=H-(A1+A1)+12 |
| 40C-501-00 | | 1 pcs | Ah= Hv-70 |
| 08-102-00 | | 2 pcs | Lg=Lv-(A2+A2) |
| | | 2 pcs | Hg=Hv-(A2+A2+22+22) |

| Accessories | Quantity (pcs-m) | View |
|---|---|---|
| CC-101-26.5/LC 1127 | 12 pcs | |
| FUJI 2000 | 12 pcs | |
| MO 20 | 8 pcs | |
| EM40-501 | 1 set | |
| EM40-01 | 4 Lv + 3 Hv | |
| EM1-03 | 4 Lg + 4 Hg | |
| EM2-01 | 4 Lg + 4 Hg | |
| EM3-01 | 4 Lv + 8 Hv | |

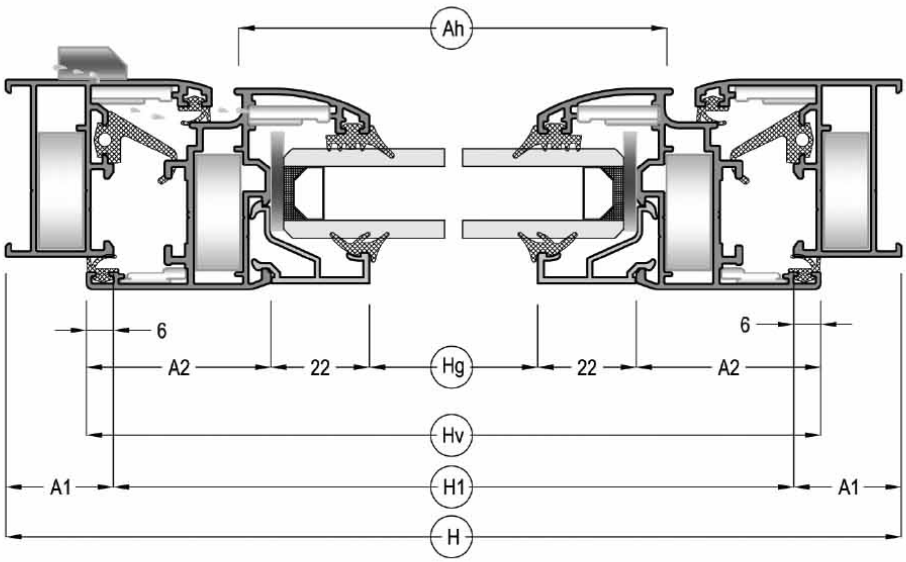

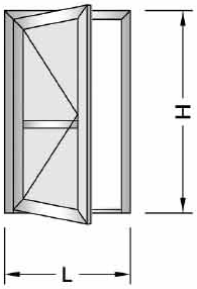


| Profile | Cut | Quantity (pcs) | Dimensions (mm) |
|---|---|---|---|
| 40C-103-00 | | 1 pcs | L |
| | | 1 pcs | H |
| | | 1 pcs | H |
| 40C-204-00 | | 2 pcs | Lv=L-(A1+A1)+12 |
| | | 2 pcs | Hv=H-(A1)+1 |
| 08-102-00 | | 2 pcs | Lg=Lv-(A2+A2) |
| | | 2 pcs | Hg=Hv-(A2+A2+22+22) |
| 40C-303-00 | | 1 pcs | Lg=Lv-(A2+A2) |
| 40C-403-00 | | 1 pcs | Lg=Lv-(A2+A2) |
| 40C-406-00 | | 1 pcs | L1=L-(A1+A1) |
| 07-212-00 | | 1 pcs | Ah=Hv-70 |

| Accessories | Quantity (pcs-m) | View |
|---|---|---|
| CC-103-26.5/LC 2327 | 2 pcs | |
| CC-105-26.5/LC 4327 | 4 pcs | |
| FUJI 2000 | 6 pcs | |
| MO 20 | 4 pcs | |
| P 100.1 | 2 pcs | |
| EM07-212 | 1 set | |
| EM40-01 | 1 Lv + 2 Hv | |
| EM1-03 | 4 Lg + 4 Hg | |
| EM2-01 | 4 Lg + 4 Hg | |
| EM3-01 | 4 Lv + 4 Hv | |
| BRUSH 10 | A3 | |

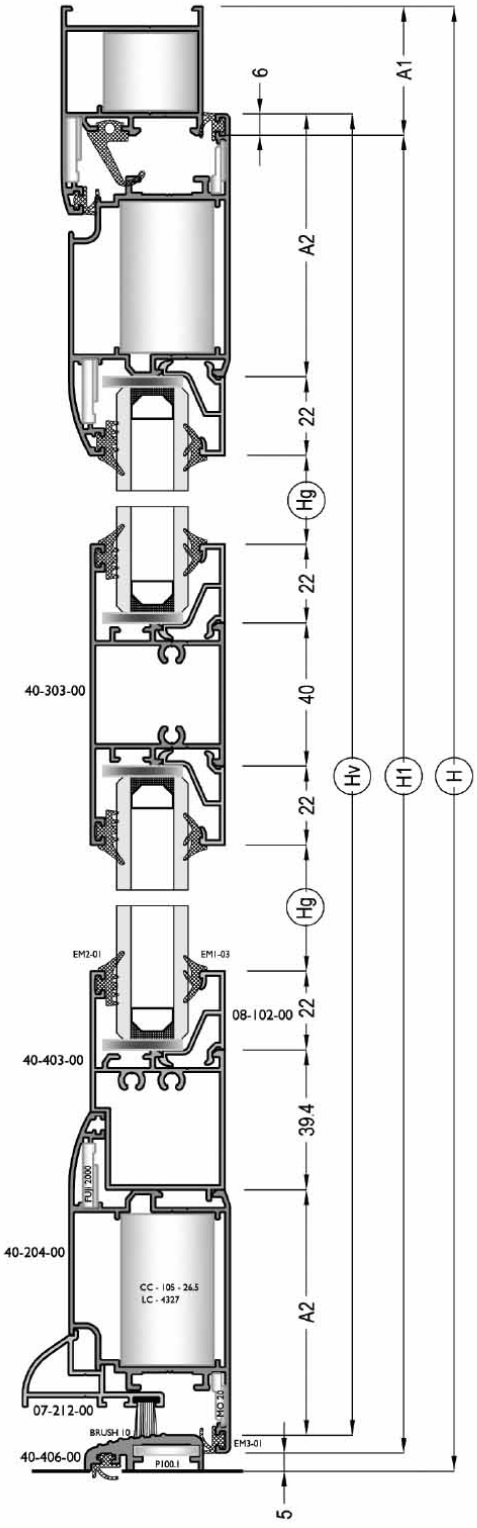


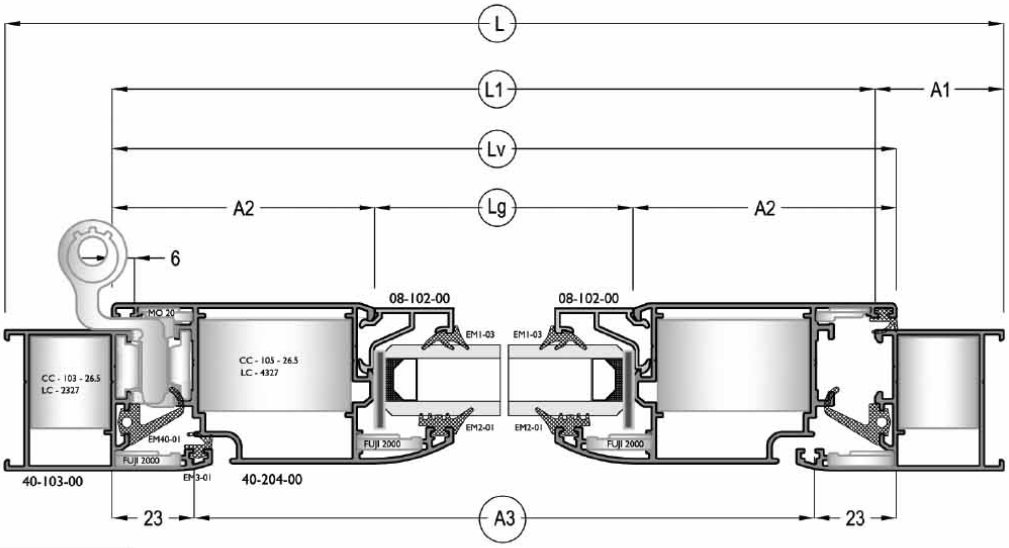

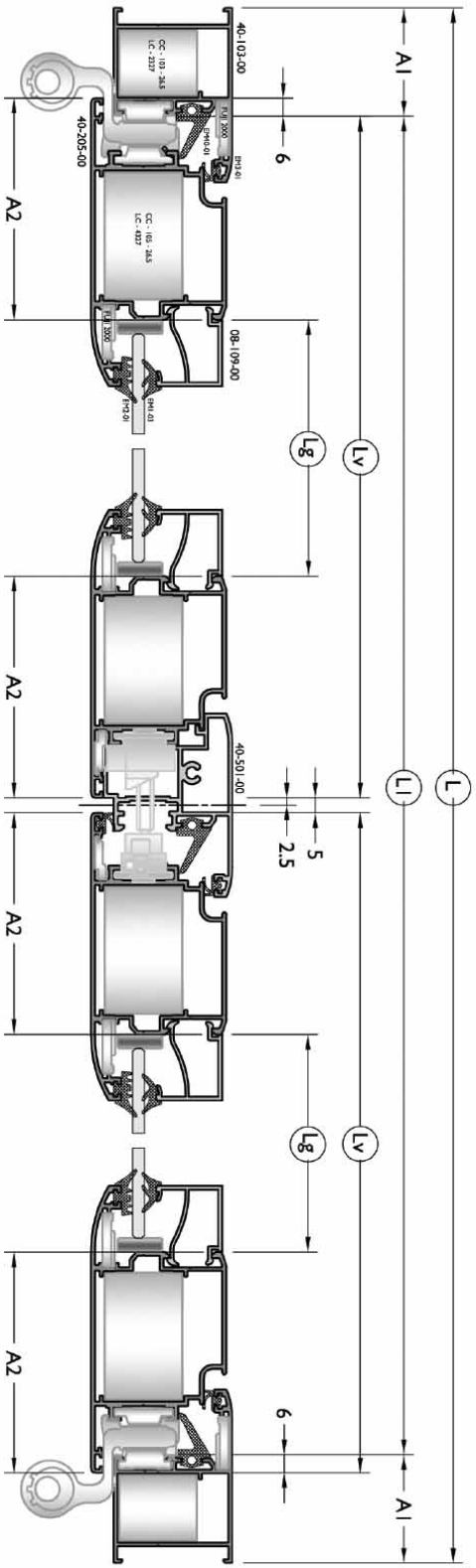


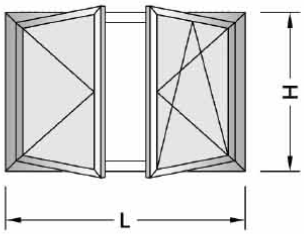


| Profile | Cut | Quantity (pcs) | Dimensions (mm) |
|---|---|---|---|
| 40C-103-00 | | 1 pcs | L |
| | | 1 pcs | H |
| | | 1 pcs | H |
| 40C-205-00 | | 2 pcs | $Lv=\frac{L-(A1+A1)+7}{2}$ |
| | | 2 pcs | Hv=H-A1-6 |
| | | 2 pcs | Hv=H-A1-6 |
| 08-109-00 | | 4 pcs | Lg=Lv-(A2+A2) |
| | | 4 pcs | Hg=Hv-(A2+142) |
| 40C-501-00 | | 1 pcs | Ah=Hv-35-12 |
| 40C-401-00 | | 2 pcs | Lg=Lv-(A2+A2) |
| 20-101-00 | | 1 pcs | L1=L-(A1+A1) |

| Accessories | Quantity (pcs-m) | View |
|---|---|---|
| CC-103-26.5/LC 2327 | 2 pcs | |
| CC-105-26.5/LC 4327 | 4 pcs | |
| FUJI 2000 | 10 pcs | |
| MO 20 | 8 pcs | |
| P 100.1 | 2 pcs | |
| EM40-501 | 1 set | |
| EM40-01 | 2 Lv + 3 Hv | |
| EM1-03 | 4 Lg + 4 Hg | |
| EM2-01 | 4 Lg + 4 Hg | |
| EM3-01 | 4 Lv + 6 Lv | |
| BRUSH 10 | L1 | |

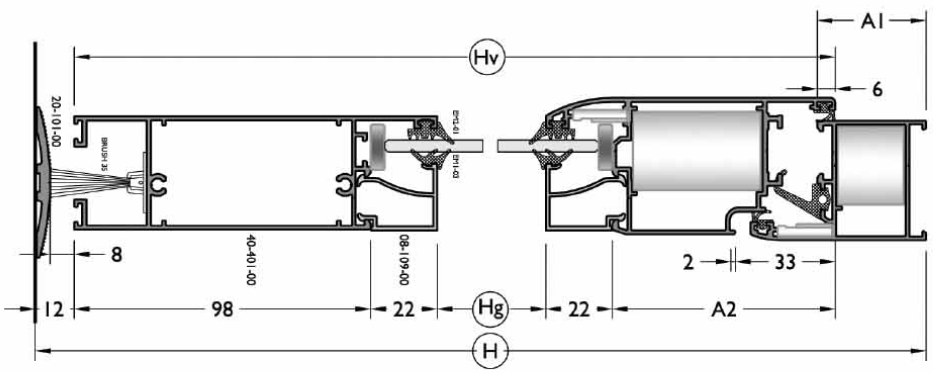

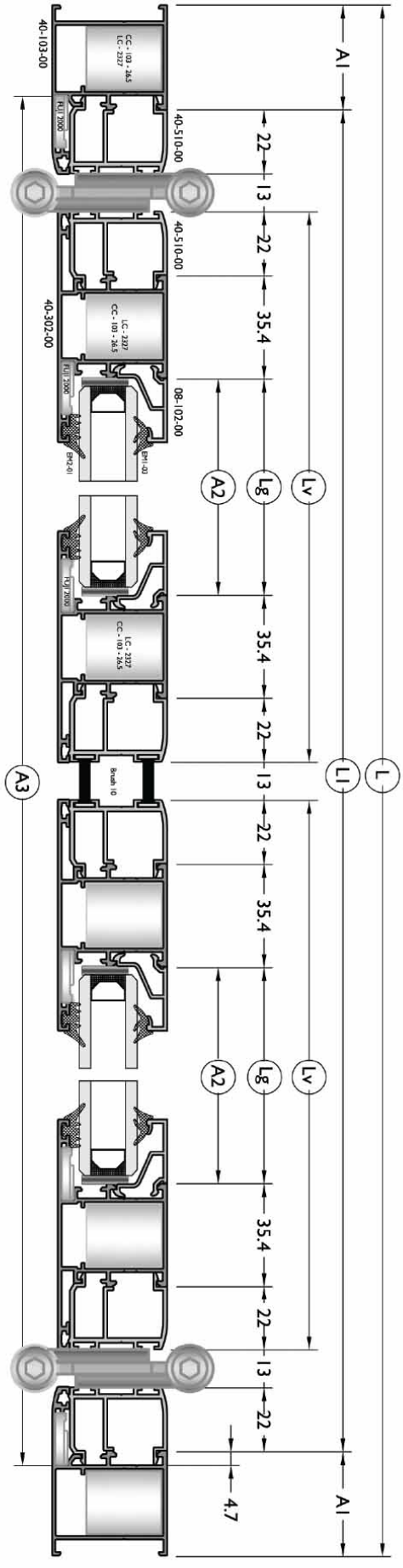


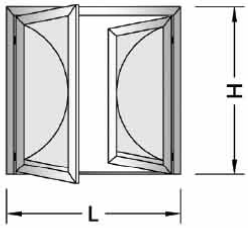


| Profile | | Cut | Quantity (pcs) | Dimensions (mm) |
|---|---|---|---|---|
| 40C-103-00 | | | 1 pcs | L |
| | | | 1 pcs | H |
| | | | 1 pcs | H |
| 40C-302-00 | | | 4 pcs | $Lv=\frac{L-2A1-83}{2}$ |
| | | | 4 pcs | Hv=H-(A1+43) |
| 40C-510-00 | | | 1 pcs | La=L-(A1+A1)+9.8 |
| | | | 4 pcs | $Lv=\frac{L-2A1-83}{2}$ |
| | | | 1 pcs | Ha=H-A1+4.9 |
| | | | 1 pcs | Ha=H-A1+4.9 |
| | | | 4 pcs | Hv=H-(A1+43) |
| 08-102-00 | | | 4 pcs | Lg=Lv-114.8 |
| | | | 4 pcs | Hg=Hv-198.2 |
| 40C-403-00 | | | 2 pcs | Lg=Lv-114.8 |

| Accessories | Quantity (pcs-m) | View |
|---|---|---|
| CC-103-26.5/LC 2327 | 10 pcs | |
| FUJI 2000 | 10 pcs | |
| EM1-03 | 4 Lg + 4 Hg | |
| EM2-01 | 4 Lg + 4 Hg | |
| BRUSH 10 | 12 Lv + 12 Hv + 78 | |

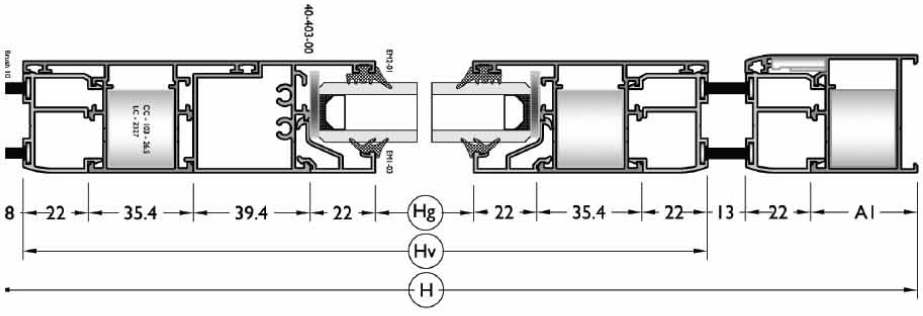

Assembly**drawings**

Assembly**drawings**

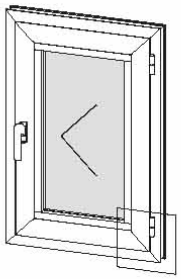

## Corner Connection With Extruded Corner Joint

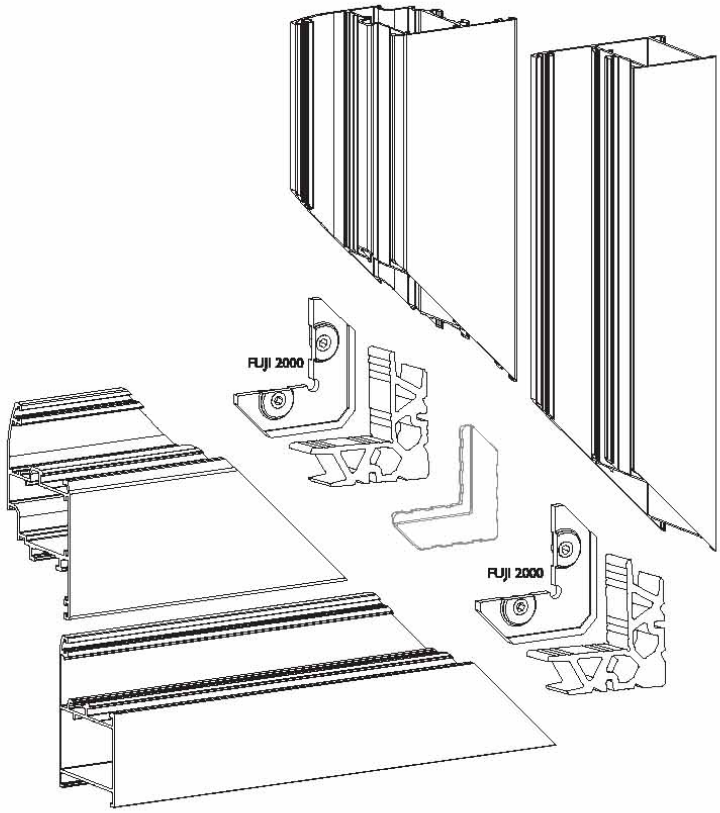


## Corner Connection With Die-Cast Corner Joint

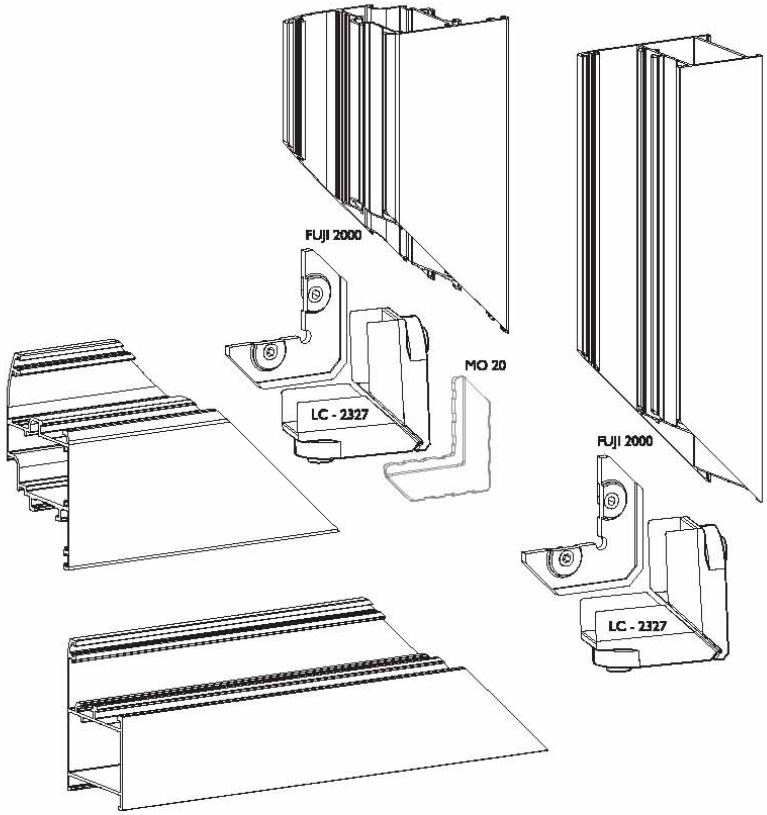

**Aluminium**

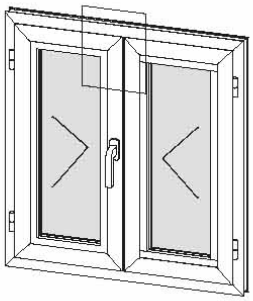

## Two Sash Window & Door Cap Assembly

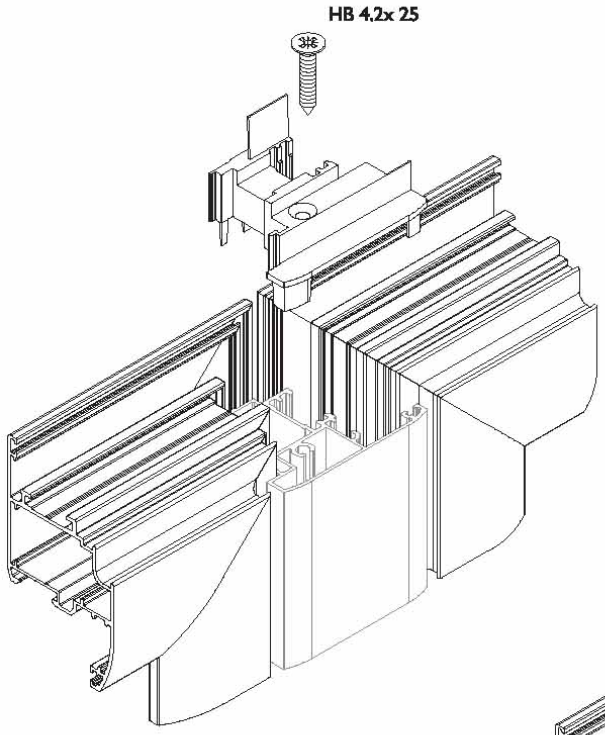


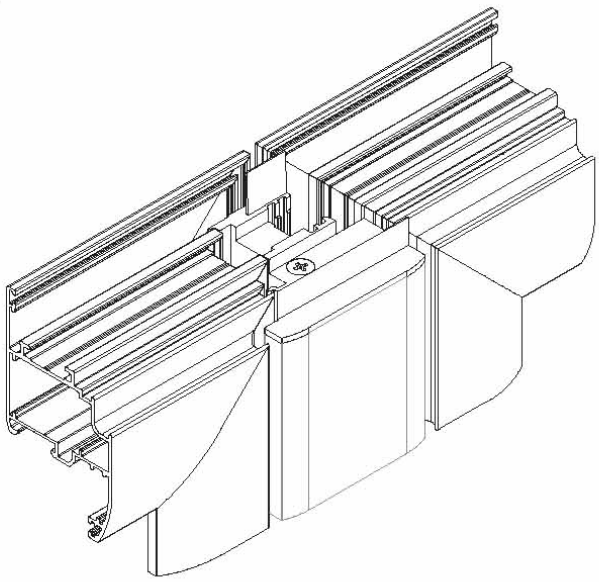

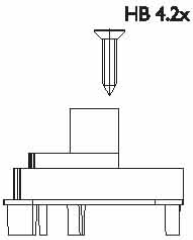


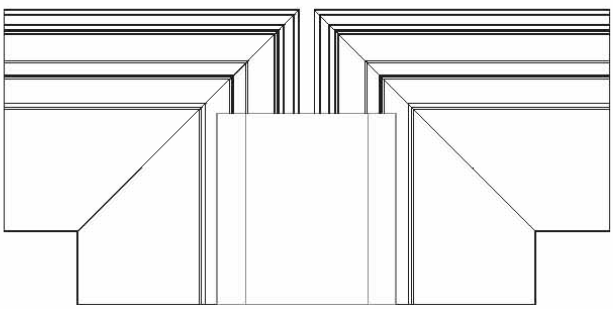

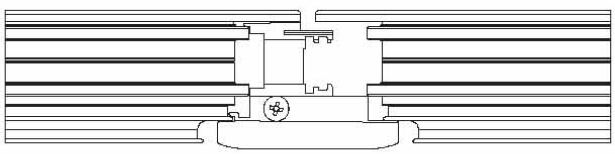

## Perimetric

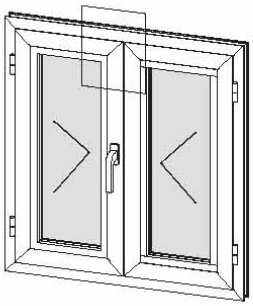

Two Sash Window & Door Cap Assembly

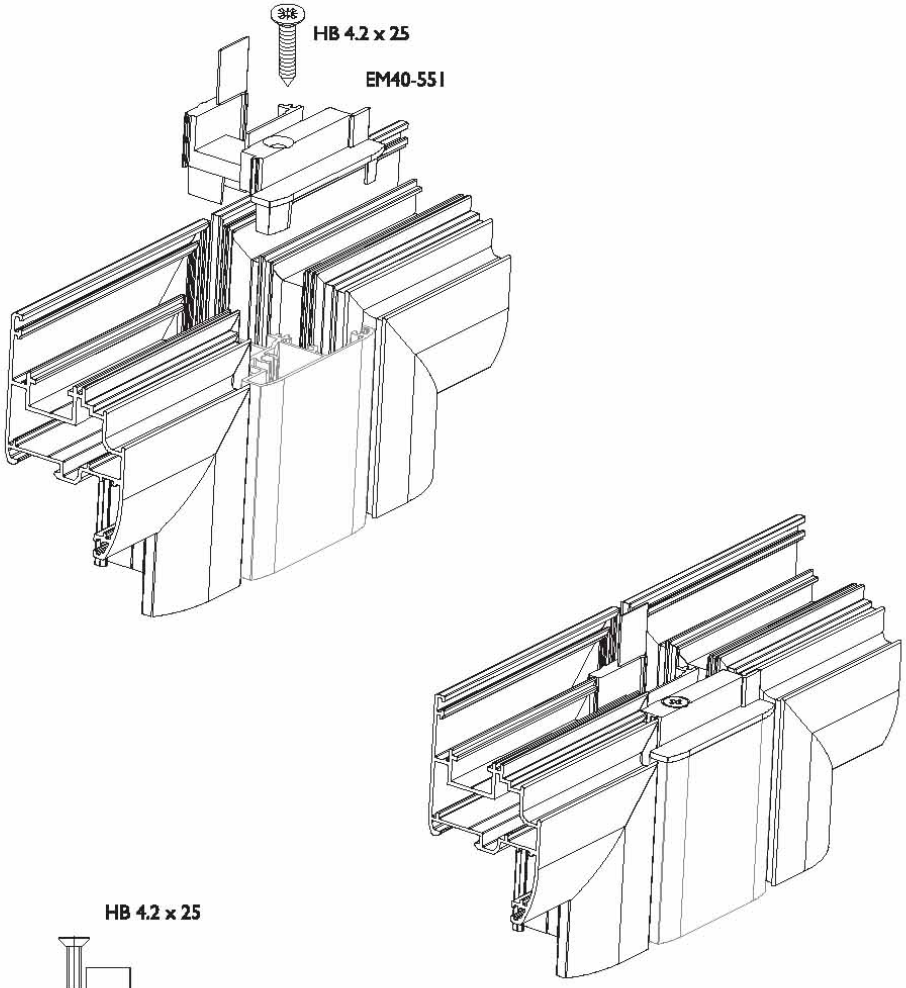


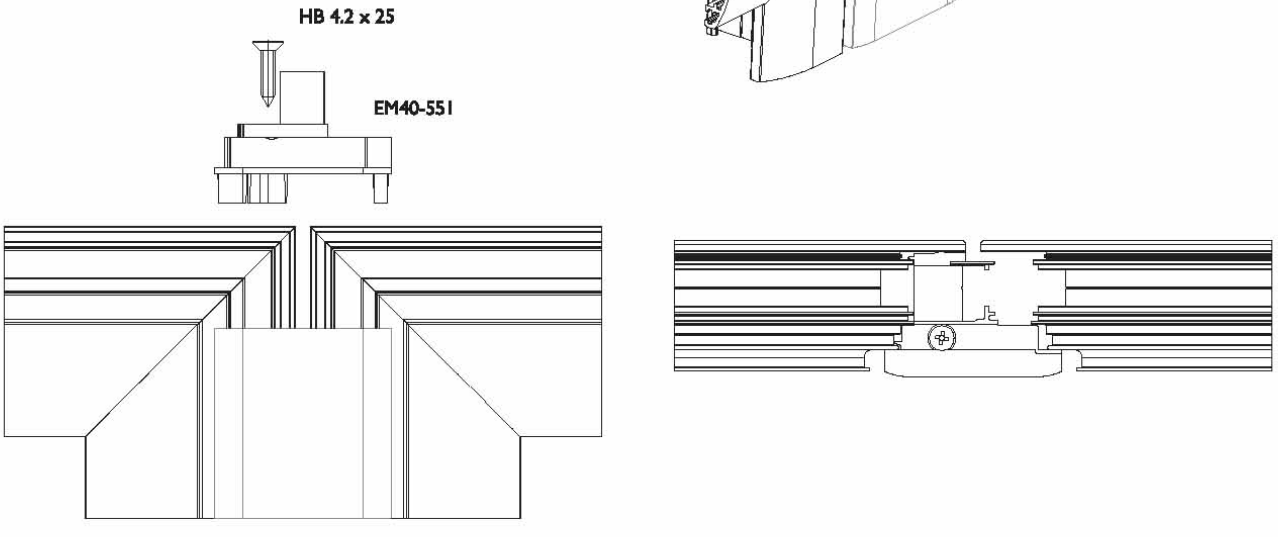

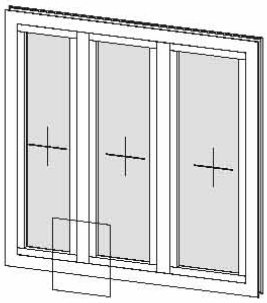

## Mullion Connection Assembly

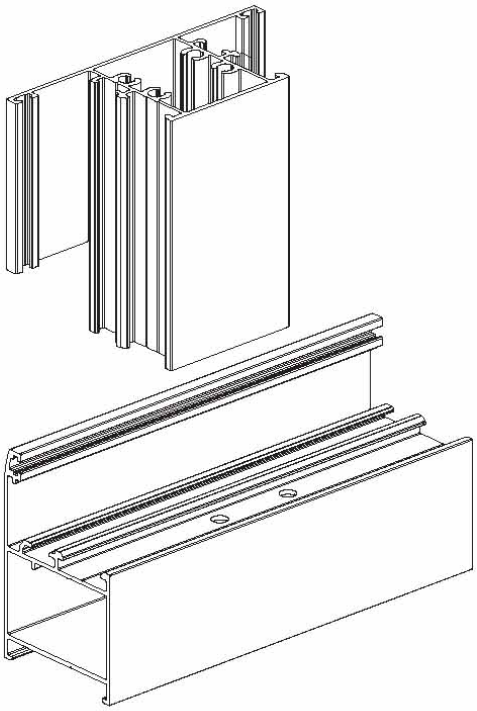

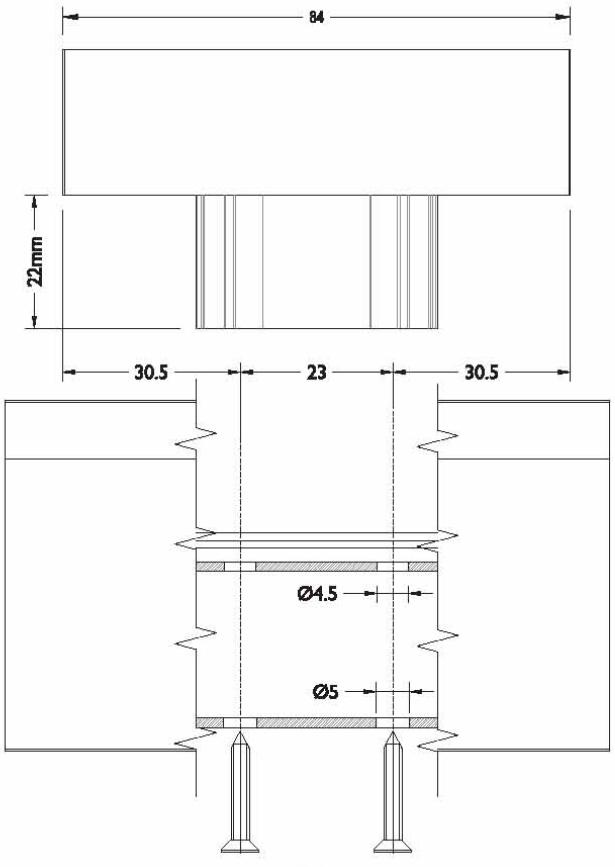


HB 4.8x 50

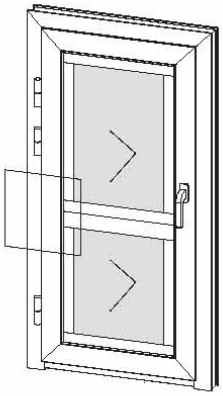

HB 4.8x 50

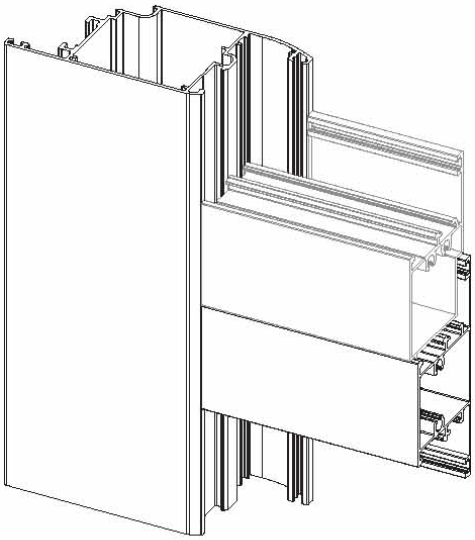

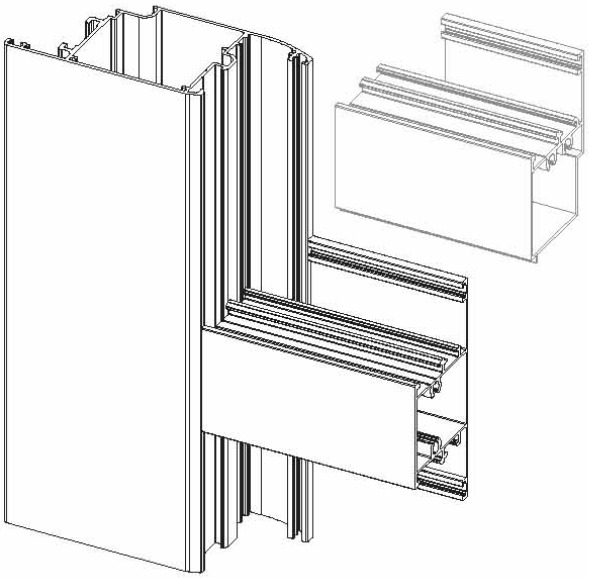

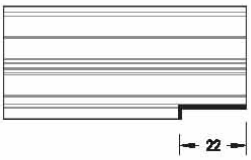


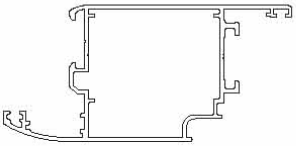

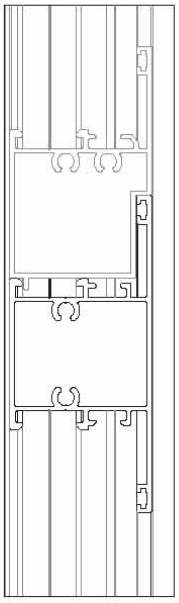

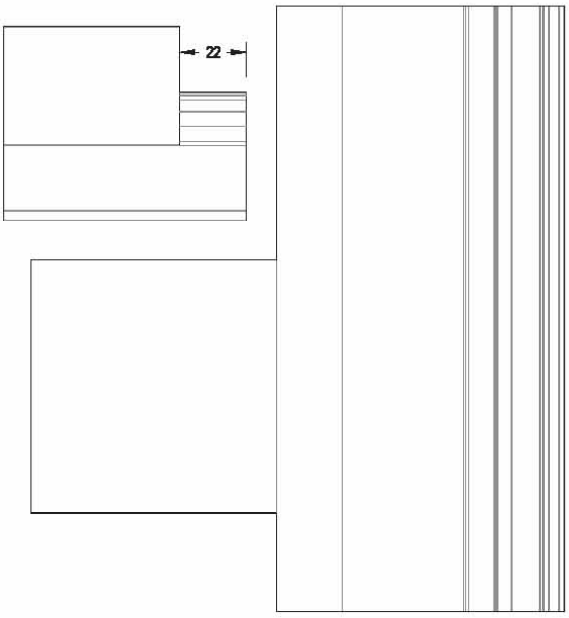

## Mullion Cutting Knife Detail

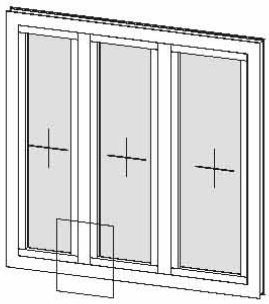

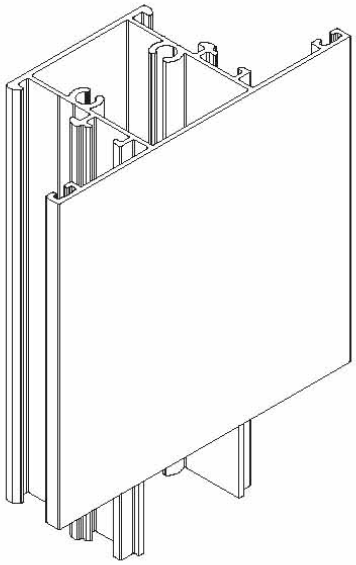

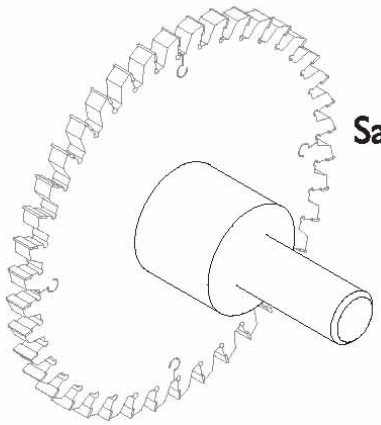

Saw

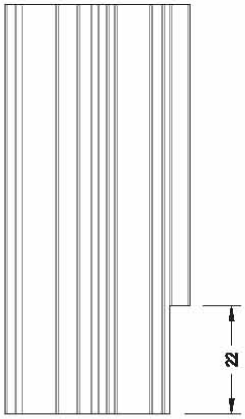


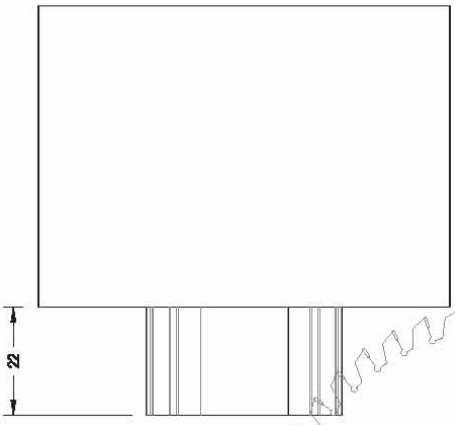


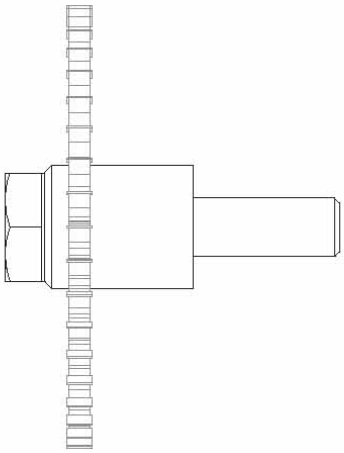

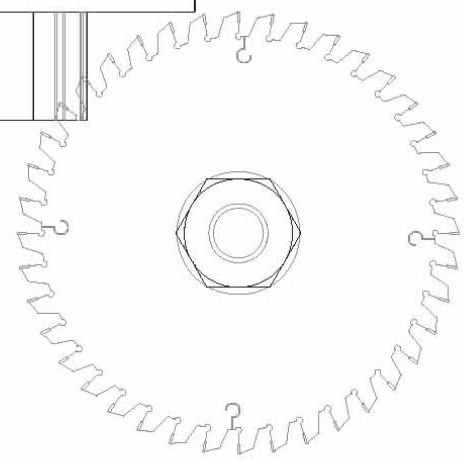

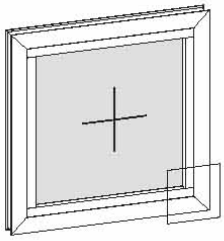

## Glazing Bead Corner Types

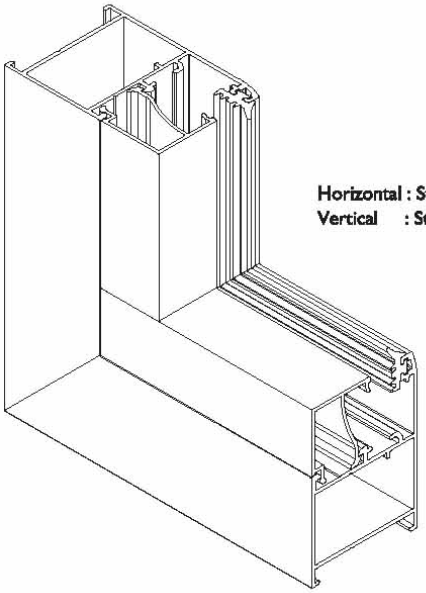

Horizontal : Standard
Vertical : Standard

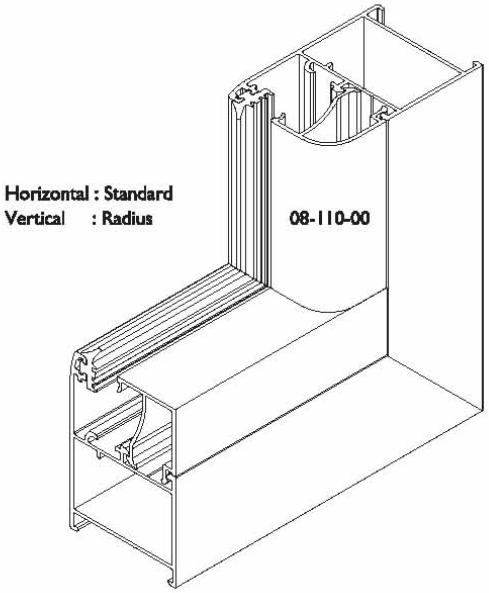

Horizontal : Standard
Vertical : Radius
08-110-00

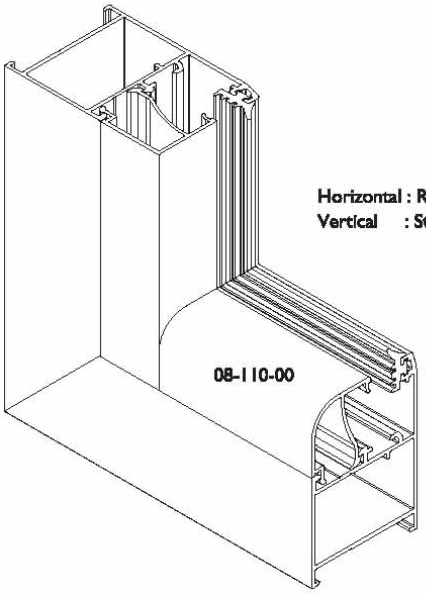

Horizontal : Radius
Vertical : Standard
08-110-00

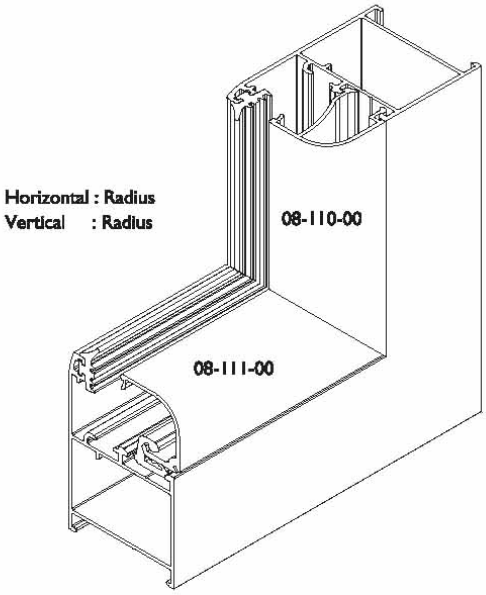

Horizontal : Radius
Vertical : Radius
08-110-00
08-111-00

**notes /** notlar

KURTOĞLU®
ALUMINIUM

**KURTOĞLU BAKIR KURŞUN SANAYİ A.Ş.**
Velimeşe Organize Sanayi Bölgesi Akbayır Yolu
Küme Evler No: 81 Ergene 59851 Tekirdağ / Türkiye
T: 0 282 684 70 00 F: 0 282 684 70 01
www. kurtogluas.com